MATERIAL NUMBER	ENGINEERING NUMBER	STUD SIZE	"S" ±.003/(0.08)	PACKAGING
191930198	D-356-06	6	.146/(3.71)	LOOSE PIECE
191930200	D-356-08	8	.173/(4.39)	
191930202	D-356-10	10	.198/(5.03)	
191930204	D-356-14	14	.265/(6.73)	
191930199	D-356-06T	6	.146/(3.71)	TAPE
191930201	D-356-08T	8	.173/(4.39)	
191930203	D-356-10T	10	.198/(5.03)	
191930205	D-356-14T	14	.265/(6.73)	

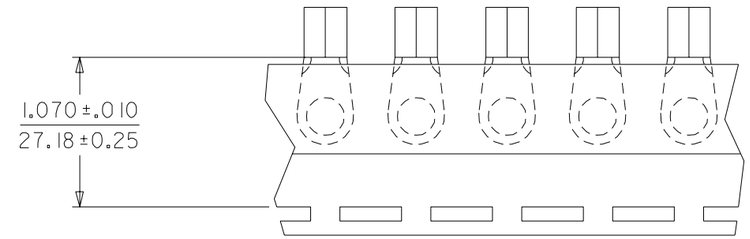

TAPE MOUNTING LOCATION

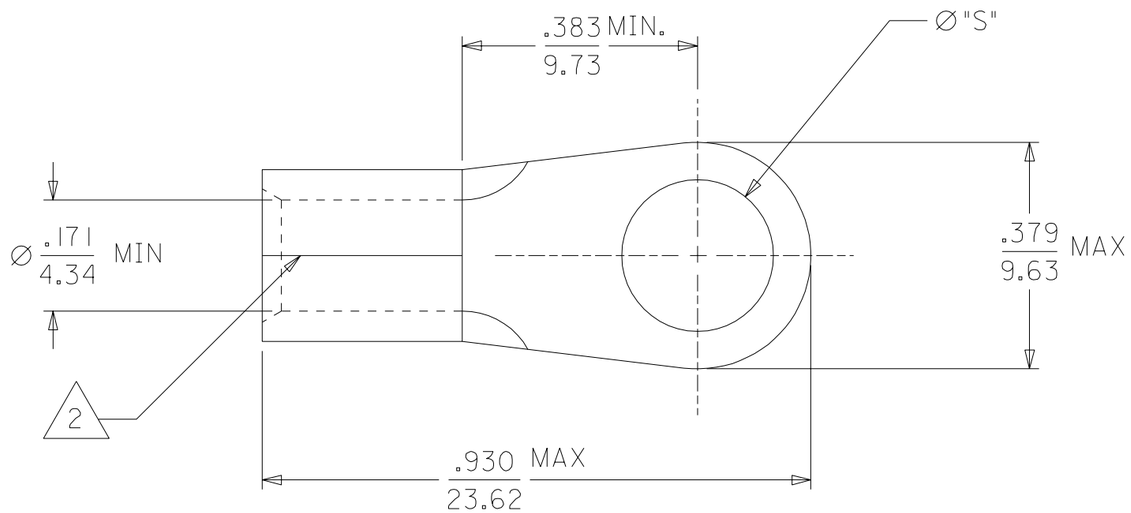

NOTES:

1. MATERIAL: COPPER
   PLATING: ELECTRO-TIN.
2. BRAZED SEAM.

SALES DRAWING

WAS SD-19069-012
EC NO. ETC2003-0333 03/06/23
DRWN: BRE 03/06/23
CH'K: HEB 03/06/23
APPR: RWD 03/06/23
DESCRIPTION
REV B

QUALITY SYMBOLS
MAJOR =0
CRITICAL C =0

GENERAL TOLERANCES: (UNLESS SPECIFIED)

	mm	INCH
4 PLACES	±0.	±.
3 PLACES	±0.	±.
2 PLACES	±0.	±.
1 PLACE	±0.	±.

ANGULAR: ±1/2°

DRAFT WHERE APPLICABLE MUST REMAIN WITHIN DIMENSIONS

SCALE 4:1
DESIGN UNITS ☐mm ☒INCH
THIRD ANGLE PROJECTION
DIMENSIONS: ☐ mm/INCH ☒ INCH/mm ☐ mm ONLY
SHT REV
REVISE ON CAD ONLY

DRAWN BY & DATE BRE 03/06/18
CHECKED BY & DATE HEB 03/06/18
APPROVED BY & DATE RWD 03/06/18

TITLE: RING TONGUE TERMINAL VERSAKRIMP 8 AWG

molex MOLEX INCORPORATED

CAD FILENAME SD-19193-012 .S01
MATERIAL NO. SEE CHART
DRAWING NO. SD-19193-012
SHEET NO. 1 OF 1

THIS DRAWING CONTAINS INFORMATION THAT IS PROPRIETARY TO MOLEX INCORPORATED AND SHOULD NOT BE USED WITHOUT WRITTEN PERMISSION.

SIZE B