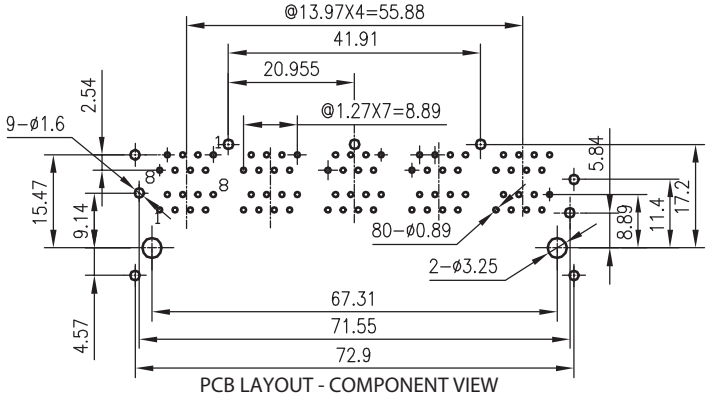

PCB LAYOUT - COMPONENT VIEW
THICKNESS 1.6MM

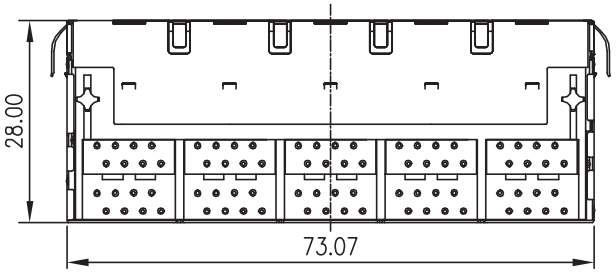

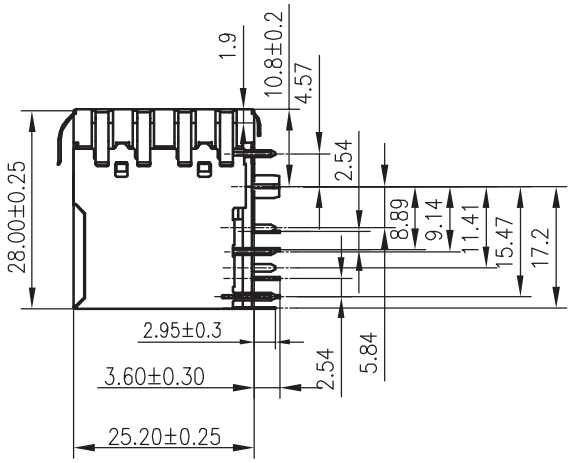

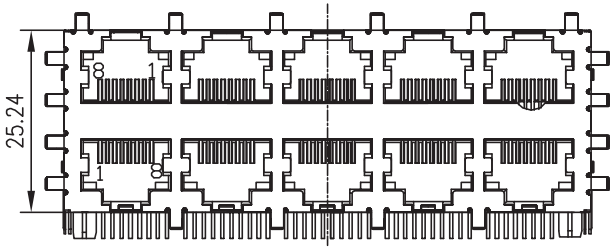

TECHNICAL CHARACTERISTICS

MATERIAL
INSULATOR MATERIAL: PBT
FLAMMABILITY RATING: UL94-V0
COLOR: BLACK
CONTACT MATERIAL: COPPER ALLOY
CONTACT TYPE: STAMPED
CONTACT PLATING: GOLD
SHIELDING: BRONZE NI PLATED
QUALITY CLASS: 500 MATING CYCLES

ENVIRONMENTAL
OPERATING TEMPERATURE: –40 °C UP TO 85 °C
COMPLIANCE: LEAD FREE AND ROHS

ELECTRICAL
CURRENT RATING: 1.5 A
WORKING VOLTAGE: 120 VAC
INSULATION RESISTANCE: >500 MΩ
DIELECTRIC WITHSTANDING VOLTAGE: 1 000 VAC/MIN
CONTACT RESISTANCE: 20 mΩ MAX

STANDARD
CERTIFIED: E324776

SOLDERING
JEDEC LEAD FREE WAVE SOLDERING PROCESS

PACKAGING
TRAY

RoHS Compliant

REV	DATE	FILE	BY
G			
F			
E			
D	04-OCT-14	NEW DIMENSION	AS
C	03-JAN-14	UL & TEMP UPDATE	QL
B	28-MAY-10	DIM. 1.9MM	JP
A	06-OCT-09	PDF	JP

PROJECTION:

GENERAL TOLERANCE
.X = +/- 0.2
.XX = +/- 0.15

APPROVAL: JTs

UNIT: MM
SCALE:
SHEET: 1/2
DRAW:

WÜRTH ELEKTRONIK

DESCRIPTION: HORIZONTAL SHIELDED 2 x 5 STACKED PORT WITH EMI PANEL FINGER 8P8C MODULAR JACK TAB UP & DOWN - WR-COM

WERI PART NO: 615 080 243 321

SIZE
A4

Cautions and Warnings:

This electronic component is designed and developed with the intention for use in general electronics equipments.
Before incorporating the components into any equipments in the field such as aerospace, aviation, nuclear control, submarine, transportation, (automotive control, train control, ship control), transportation signal, disaster prevention, medical, public information network etc. where higher safety and reliability are especially required or if there is possibility of direct damage or injury to human body, Wurth Elektronik must be asked for a written approval.
In addition, even electronic component in general electronic equipments, when used in electrical circuits that require high safety, reliability functions or performance, the sufficient reliability evaluation-check for the safety must be performed before by the user before usage.

RoHS Compliant							
G				PROJECTION:	GENERAL TOLERANCE		
F					.X = +/_ 0.2		
E					.XX = +/_ 0.15		
D							
C				APPROVAL: JC	UNIT: MM	DESCRIPTION: DISCLAIMER	SIZE
B					SCALE:		
A	10-SEP-14	PDF	QL		SHEET: 2/2	WERI PART NO: DISCLAIMER	A4
REV	DATE	FILE	BY		DRAW: QL		

WÜRTH ELEKTRONIK