DRAWING No.	SHT. 1 OF 1 SHTS.	© THE COPYRIGHT OF THIS DRAWING IS RESERVED BY HELLERMANN TYTON. IT IS ISSUED ON CONDITION THAT IT IS NOT COPIED, REPRODUCED OR DISCLOSED TO A THIRD PARTY EITHER WHOLLY OR IN PART WITHOUT THE CONSENT IN WRITING OF HELLERMANN TYTON.	THIRD ANGLE PROJECTION	BS 8888	DO NOT SCALE IF IN DOUBT ASK	Q.A.		H/S SETT	
152102						H/S Q.A.		REL. INSP.	
						H/S PROD		EXT.ISS.CODE	7/12

STANDARD PART (AFTER UNRESTRICTED RECOVERY)

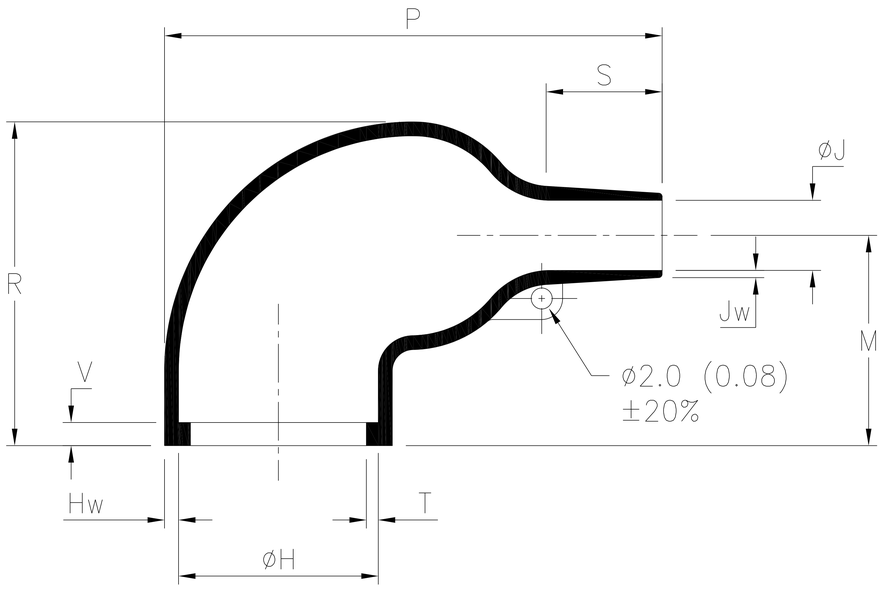

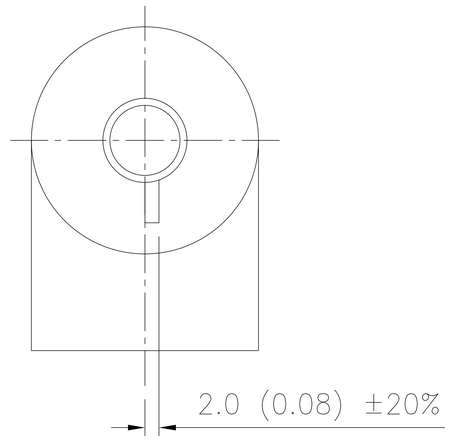

EXPANDED (AS SUPPLIED)

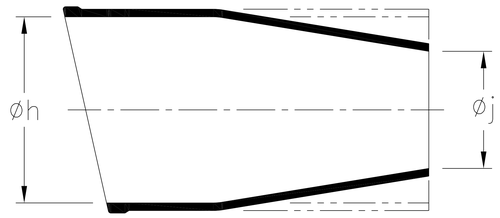

OPTION TO STANDARD PART
FILLER PORT (CODE P)

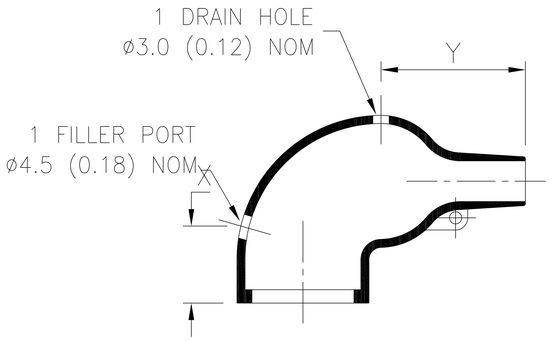

SPEC.	PART No.	EXPANDED DIAMETERS (AS SUPPLIED)		RECOVERED DIAMETERS		RECOVERED DIMENSIONS							
		øh	øj	øH	øJ	M	P	R	S	T	V	Hw	Jw
		MIN	MIN	MAX	MAX	NOM	±20%	±10%	NOM	±20%	MAX	±20%	±30%
VG 95343 T06E003A	1155-4	31 (1.22)	31 (1.22)	18 (0.71)	7 (0.28)	21 (0.83)	51 (2.01)	31 (1.22)	15 (0.59)	1.0 (0.04)	3.3 (0.13)	1.8 (0.07)	1.0 (0.04)
–	1155-6	31 (1.22)	18 (0.71)	18 (0.71)	7 (0.28)	21 (0.83)	51 (2.01)	31 (1.22)	15 (0.59)	1.0 (0.04)	3.3 (0.13)	1.8 (0.07)	1.0 (0.04)
–	1155-9	35 (1.38)	35 (1.38)	18 (0.71)	7 (0.28)	21 (0.83)	51 (2.01)	31 (1.22)	15 (0.59)	1.0 (0.04)	3.3 (0.13)	1.8 (0.07)	1.0 (0.04)
–	1155-50	28 (1.10)	14 (0.55)	18 (0.71)	7 (0.28)	21 (0.83)	51 (2.01)	31 (1.22)	15 (0.59)	1.0 (0.04)	3.3 (0.13)	2.0 (0.08)	1.2 (0.06)

OPTIONAL FILLER PORT DETAIL (CODE P)			
SPEC.	PART No.	RECOVERED DIMENSIONS	
		X	Y
		±20%	±20%
VG 95343 T07E003A	1155-4	18 (0.71)	20 (0.79)
–	1155-6	18 (0.71)	20 (0.79)
–	1155-9	18 (0.71)	20 (0.79)
–	1155-50	18 (0.71)	20 (0.79)

OPTIONAL FILLER PORT DETAIL (CODE D31)		
SPEC.	PART No.	RECOVERED DIMENSIONS
		X
		±20%
VG 95343 T07E003A	1155-4	22.0 (0.87)
–	1155-6	22.0 (0.87)
–	1155-9	22.0 (0.87)
–	1155-50	22.0 (0.87)

OPTION TO STANDARD PART
DRAIN HOLES (CODE D31)

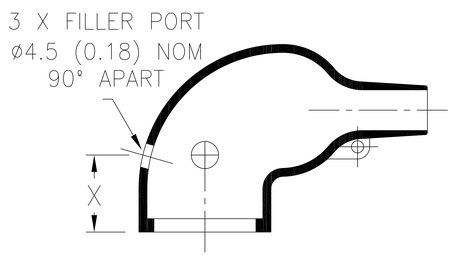

ISSUE	NOTE No.	DRAWN	DATE
6	P1499	GL	24/02/15
5	P1480	GB	29/09/14
4	P1453	CB	01/04/14
3	P1362	DJC	05/10/11
2	P1329	G.B.	11/10/10

HellermannTyton
William Prance Road,
Plymouth International Med. & Tech. Park,
Plymouth, PL6 5WR
Tel ++44 (0) 1752 701261
Fax ++44 (0) 1752 790058

NAME	S.Almond	SCALE	NTS	ADHESIVE	A3 ORIGINAL SHEET SIZE 420mm x 297mm	SHT. 1 OF 1 SHTS.
DATE	18/04/08	DIMS IN	mm (in)			
TITLE RT. ANGLE SLEEVE				PART No. 1155	DRAWING No. 152102	