NOTES:
1. MATERIALS AND FINISHES (PLATING THICKNESS IN MICRO-INCHES):
   BODY - ZINC DIECAST, NICKEL PLATING
   CONTACT - BRASS, GOLD PLATING
   COVER - BRASS, NICKEL PLATING
   LOCK COVER - NYLON 46, COLOR: SEE TABLE BELOW
   RING - BRASS, NICKEL PLATING
   INSULATORS - TEFLON, NATURAL
2. ELECTRICAL:
   A. IMPEDANCE: 50 OHM (NOMINAL)
   B. FREQUENCY RANGE: DC - 6 GHz,(OPTIMIZED FOR DC-4GHz)
   C. VSWR(RETURN LOSS): 1.4 (-15.6 dB), MAX.(DC-2GHz)
      (MATED PAIR): 1.5 (-13.9 dB), MAX.(2-3GHz)
   D. D.W.V.: 800 VRMS, MIN.
3. MECHANICAL:
   A. DURABILITY: 100 CYCLES MIN.
   B. TEMPERATURE RANGE: -40 °C TO 85 °C
4. PACKAGING:
   A. MARKING: TRAY TO BE MARKED
      "AMPHENOL, FAI-NXRP-PCB-10 AND
      DATE CODE"
5. HEATING STAGE: RECOMMEND SOLDERING
   TEMPERATURE 225° WITHIN 40 SECONDS.

THIRD ANGLE PROJ.

CONFIGURATION CONTROL:
NO CHANGES PERMITTED TO DRAWING WITHOUT PPAP QUALIFIED CUSTOMER APPROVAL

REVISIONS

REV	DESCRIPTION	DATE	ECO	APPR
D	REDRAWN TO UPDATE FORMAT	31-Oct-08	-----	SCOTT
E	A) 4-3.94 WAS 3.94, B) 5.08+0.15/-0.05 WAS 5.08, C) MODIFY NOTES 1, NOTES 2, NOTES 4 AND ADD NOTES 5, D) 5.08+0.1/-0 WAS 5.08, E) 4-∅1.7+0.05/-0 WAS 4-∅1.7, \RD-DM09062201S2	24-Jun-09	47619	SH

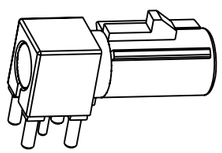

SCALE 1.500

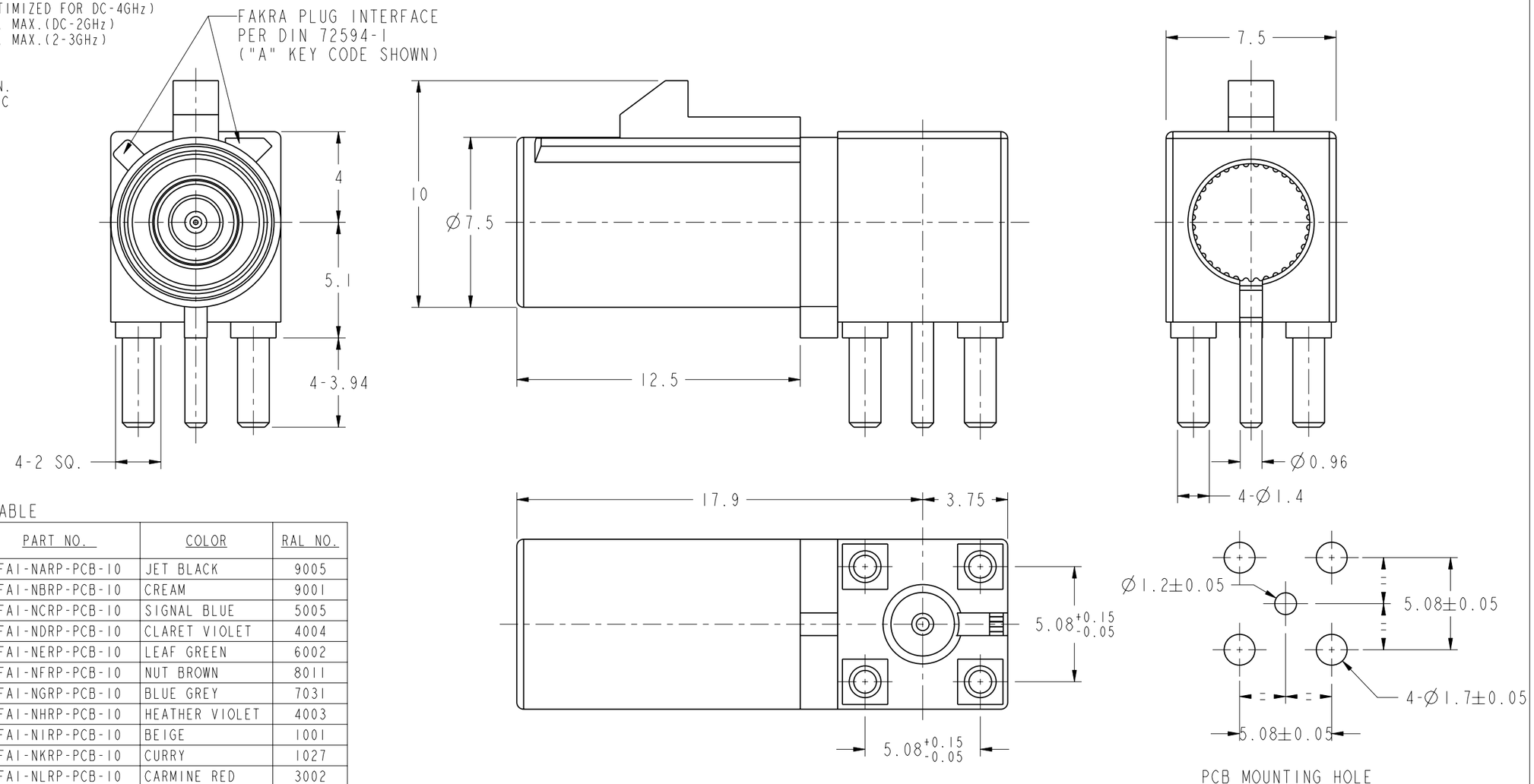

PCB MOUNTING HOLE

TABLE

KEY CODING	DRAWING NO.	PART NO.	COLOR	RAL NO.
A	FK1252AW-005-NT30G-50	FAI-NARP-PCB-10	JET BLACK	9005
B	FK1252BW-005-NT30G-50	FAI-NBRP-PCB-10	CREAM	9001
C	FK1252CW-005-NT30G-50	FAI-NCRP-PCB-10	SIGNAL BLUE	5005
D	FK1252DW-005-NT30G-50	FAI-NDRP-PCB-10	CLARET VIOLET	4004
E	FK1252EW-005-NT30G-50	FAI-NERP-PCB-10	LEAF GREEN	6002
F	FK1252FW-005-NT30G-50	FAI-NFRP-PCB-10	NUT BROWN	8011
G	FK1252GW-005-NT30G-50	FAI-NGRP-PCB-10	BLUE GREY	7031
H	FK1252HW-005-NT30G-50	FAI-NHRP-PCB-10	HEATHER VIOLET	4003
I	FK1252IW-005-NT30G-50	FAI-NIRP-PCB-10	BEIGE	1001
K	FK1252KW-005-NT30G-50	FAI-NKRP-PCB-10	CURRY	1027
L	FK1252LW-005-NT30G-50	FAI-NLRP-PCB-10	CARMINE RED	3002
M	FK1252MW-005-NT30G-50	FAI-NMRP-PCB-10	PASTEL ORANGE	2003
N	FK1252NW-005-NT30G-50	FAI-NNRP-PCB-10	PASTEL GREEN	6019
Z	FK1252ZW-005-NT30G-50	FAI-NZRP-PCB-10	WATER BLUE	5021

CUSTOMER OUTLINE DRAWING
ALL OTHER SHEETS ARE FOR INTERNAL USE ONLY

UNLESS OTHERWISE SPECIFIED, DIMENSIONS ARE IN METRIC AND TOLERANCES ARE:

0.5 - 6mm	6 - 30mm	30 - 120mm	ANGLES
±0.1mm	±0.2mm	± 0.3mm	±1°

NOTICE - These drawings, specifications, or other data (1) are, and remain the property of Amphenol corp. (2) must be returned upon requiest; and (3) arre confidential and not to be disclosed to any person other than those to whom they are given by Amphenol Corp. the funishing of these drawings, specifications, or other data by Amphenol Corp., or to any other person to anyone for any purpose is not to be regarded by implicatioin or otherwise in any manner licensing, granting rights to permitting such holder or any other sperson to manufacture, use or sell any product, process or design, patented or otherwsie, that may in any way be related to or disclosed by said drawings, specifications, or other data.

MATERIAL

REFERENCE

FINISH

DRAWN ROLF — DATE 29-Jan-08
ENGINEER ANGELA — DATE 29-JAN-08
APPROVED ANGELA — DATE 29-Jan-08
CAD FILE I:\FAKRA\FK1252XX-005-NT30G-50

TITLE
FAKRA SMB R/A
PCB MOUNT PLUG

SCALE: 5.0:1.0 | SHEET 2 OF 2
DWG SIZE B | CODE ID 74868 | REV E

Amphenol RF
Danbury CT USA, Tainan, Taiwan, Shenzhen, China
www.amphenolrf.com

DRAWING NO. FK1252XX-005-NT30G-50
ITEM NO. FK1252AEX02NC5F
PART NO. FAI-NXRP-PCB-10