MICRO SWITCH
FREEPORT ILLINOIS U S A
A DIVISION OF HONEYWELL
FED MFG CODE 81929

SWITCH - ENCLOSED

CATALOG LISTING
1 CH 111

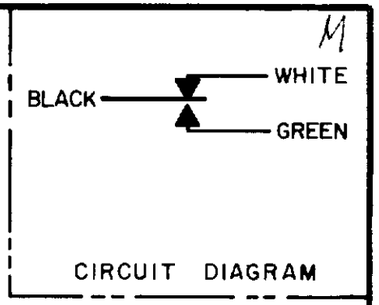

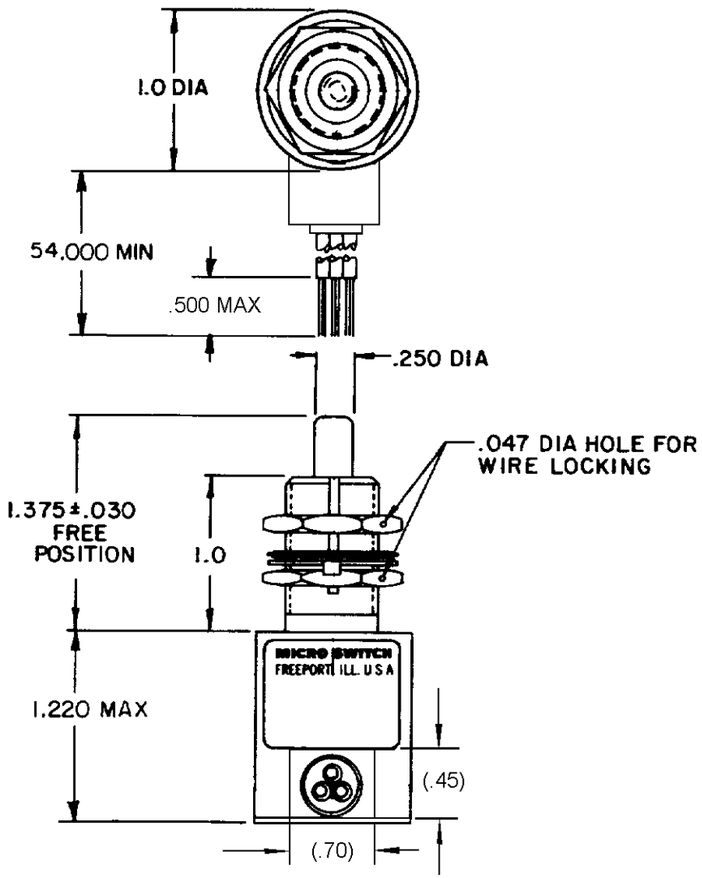

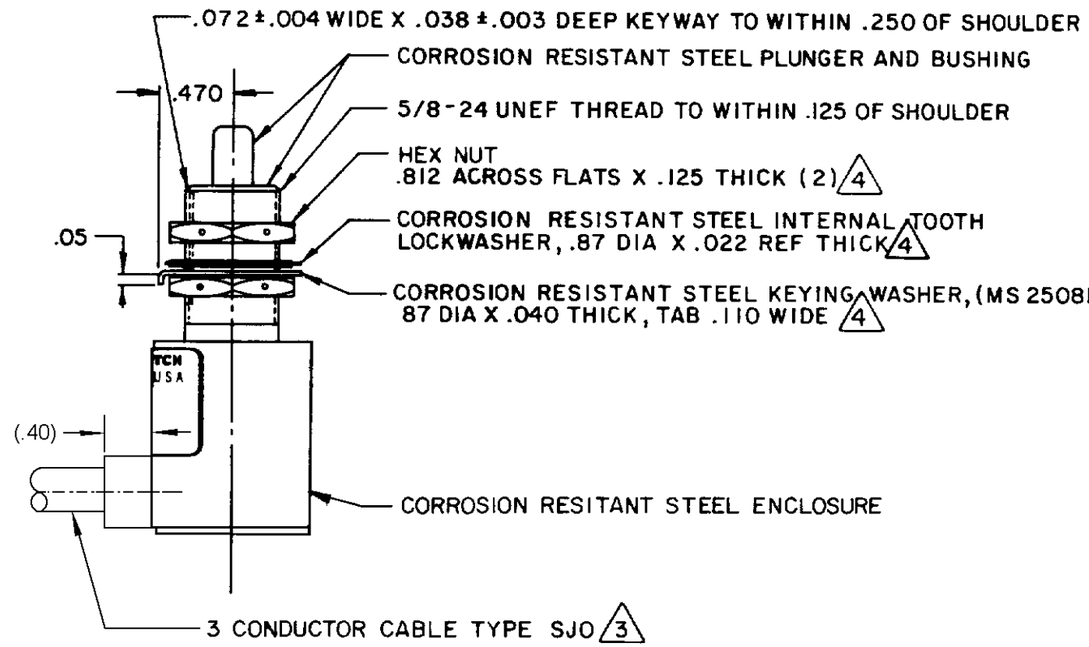

NOTES
1 - SWITCH SEALED PER MIL-PRF-8805 SYMBOL 3
2 - CIRCUIT DIAGRAM, CATALOG LISTING AND DATE CODE ARE SHOWN ON NAMEPLATE
3 WIRE LEADS COLOR CODED TO SHOW LEAD IDENTIFICATION
4 HARDWARE MAY BE PACKAGED UNASSEMBLED PER MIL-PRF-8805

THIS DRAWING COVERS A PROPRIETARY ITEM AND IS THE PROPERTY OF MICRO SWITCH A DIVISION OF HONEYWELL THIS DRAWING IS NOT TO BE COPIED OR USED WITHOUT THE APPROVAL OF MICRO SWITCH

SCALE FULL
DO NOT SCALE PRINT

TOLERANCES
APPLY TO DESIGN UNITS. CONVERSIONS ARE ONLY FOR REFERENCE. UNLESS NOTED TOLERANCES ARE ±

	DIM mm	TOL mm/in	DIM in	TOL mm/in
NO PLACES	X	1/64		
ONE PLACE	X.X	0.4/0.016	X.X	0.8/.03
TWO PLACES	X.XX	0.18/.008	X.XX	0.38/.015
THREE PLACES			X.XXX	0.13/.005
ANGLES				

DESIGN UNITS SI METRIC ☐ US CUSTOMARY ☒

THIRD ANGLE PROJECTION

WEIGHT 8.6 OZ MAX

CHARACTERISTICS

OPERATING FORCE - - - - - - - - - 6-12 LB
FULL OVERTRAVEL FORCE - - - - - - 30 LB MAX
RELEASE FORCE - - - - - - - - - - 4 LB MIN
PRETRAVEL - - - - - - - - - - - - - .040 MAX
DIFFERENTIAL TRAVEL - - - - - - 020 MAX
OVERTRAVEL - - - - - - - - - - - .250 MIN

ELECTRICAL DATA

CONTACT ARRANGEMENT
S P D T

LOAD	28 VDC SEA LEVEL	28 VDC 50,000 FT.
RES	4	4
IND	2	2
MOTOR	4	

1 CH 111	M	27OCT05	RJ	3 OCT 86	GLL
REPLACES	RELEASE NO.	DRAWING NUMBER	ISSUE	CHECK	CHECK
PR-15094			X 5 6		

REVISIONS

A	C063259	TSK 15 APR 88	3 OCT 86	
B	C073770	LJF 28 OCT 92		
C	C074101	LJF 28 JAN 93	GLL	
D	CO 77804-B SAD 18 MAY94			
E	0016449	KSR 27OCT05	3 OCT 86	

KAG	3 OCT 86	J A S	30 SEPT 86	
CHECK		DRAWN		

RASTER FO-5285 1-B