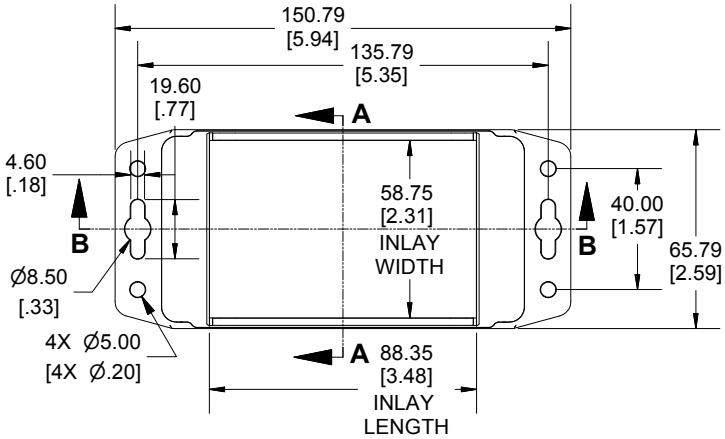

ENCLOSURE ASSEMBLY TOP VIEW

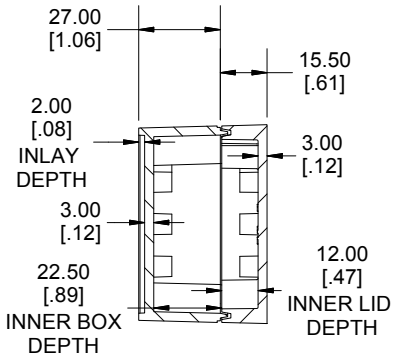

SECTION A-A
END VIEW

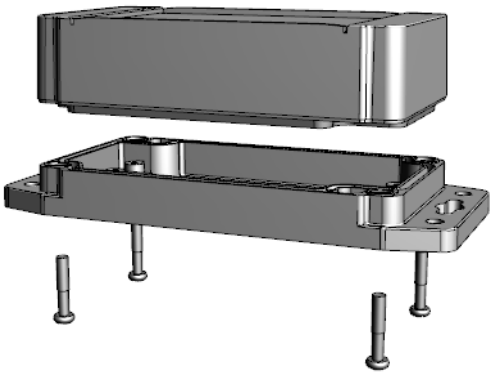

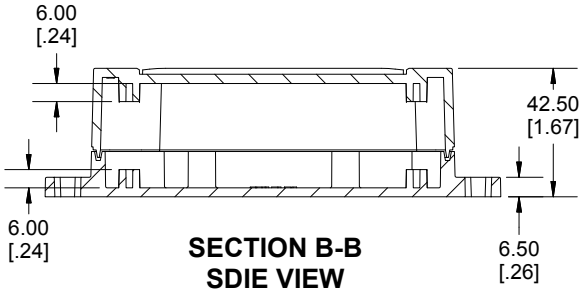

SECTION B-B
SDIE VIEW

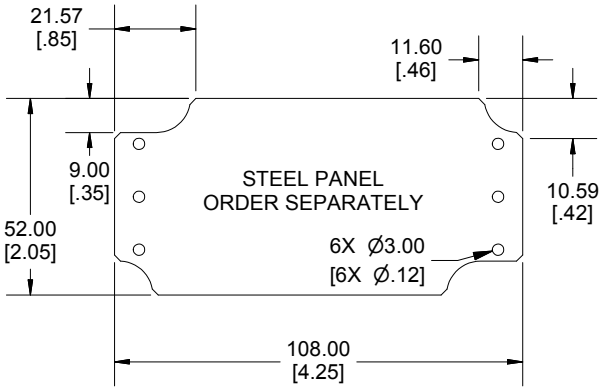

POLYCARBONATE
VERSION ONLY
c UL US LISTED
FILE #E65324
NEMA 4, 4X

Enclosures can be Factory Modified (Milling, Drilling, Printing etc.)
Contact Factory mjm@hammondmfg.com for quotes
Solid models of this enclosure available in STEP or IGES.
(Part number and text placement/orientation on our products are subject to change, we do not recommend using them as a locating reference for modification purposes)

NOTE
Purchased assembly includes styled box, flanged lid, 4 cover screws, and preformed silicone gasket. General Purpose ABS version is not UL approved. (Matl UL94 - HB) Polycarbonate version is UL 508 approved. (Matl UL94 - 5VA @ 3mm)
Recommended Cover screw torque -- 2.5 lbf-in (30 cN-m)

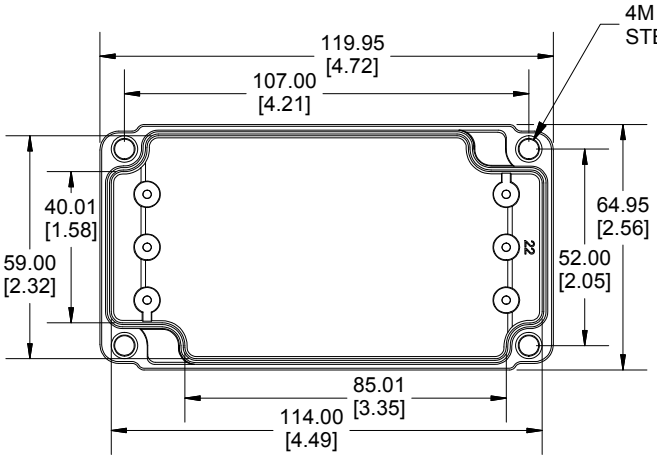

INSIDE BOX VIEW

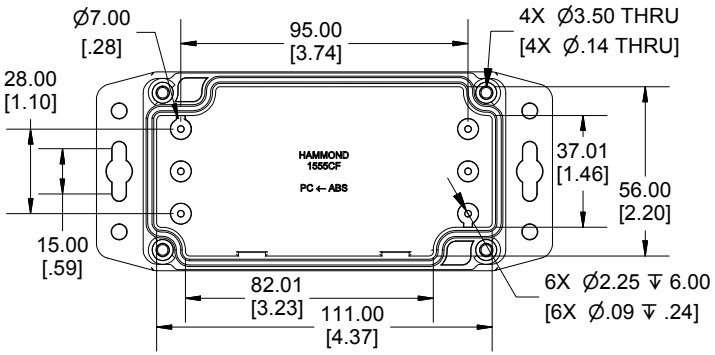

INSIDE LID VIEW

1555CF	
1555CF Regular Enclosure	
General Purpose ABS RAL-7035	1555CF22GY
Polycarbonate RAL-7035	1555C2F22GY
ACCESSORIES	
Steel Inner Panels	1555CFPL
Steel Panel / P.C. Board Self Tapping Screw [#4 X 1/4" (6.4mm) Plated]	1555TS100
Cover Screws (Pkg 4) [M4 X 20mm Stainless Steel]	SC1554

Dimensions:
mm
[inches]

HAMMOND MANUFACTURING®

1555CF22

www.hammondmfg.com