Mar.1.2017 Copyright 2017 HIROSE ELECTRIC CO., LTD. All Rights Reserved.

	COUNT	DESCRIPTION OF REVISIONS	BY	CHKD	DATE		COUNT	DESCRIPTION OF REVISIONS	BY	CHKD	DATE
△					. .	△					. .
△					. .	△					. .
△					. .	△					. .

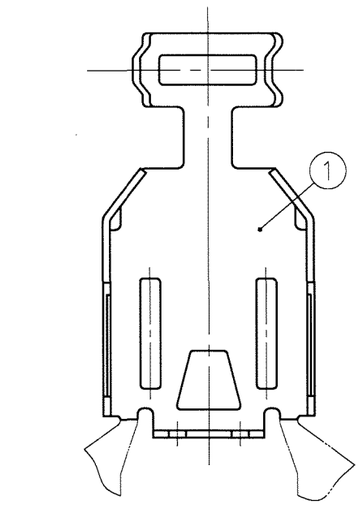

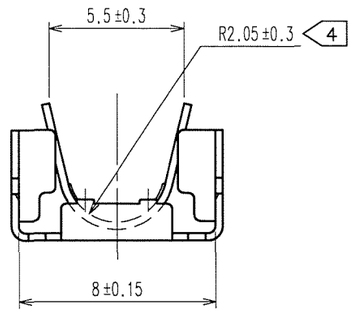

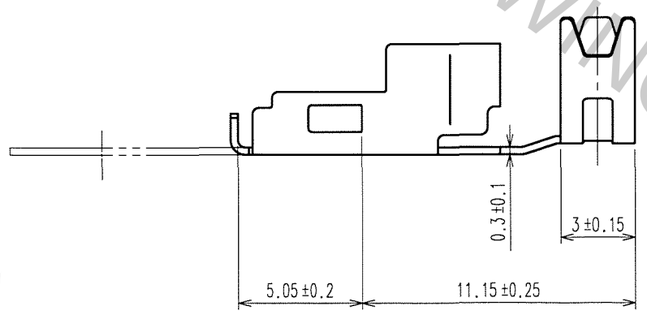

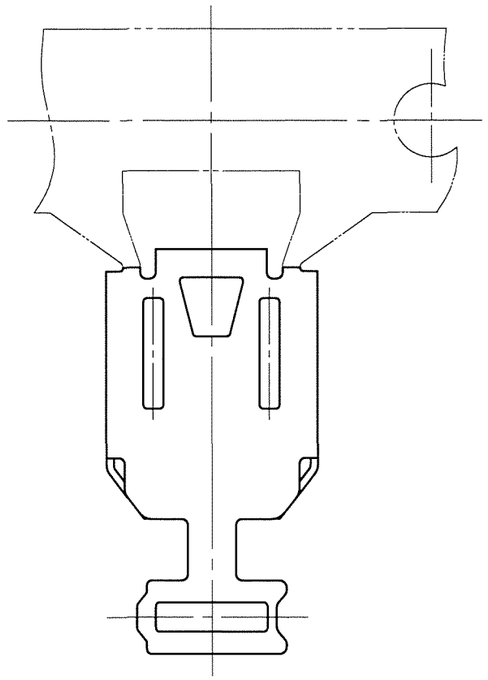

3 Fig - 2 CUT OFF A CAREER

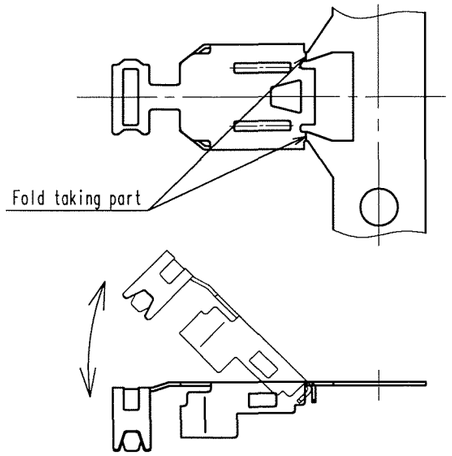

1 Fig - 1 REELING

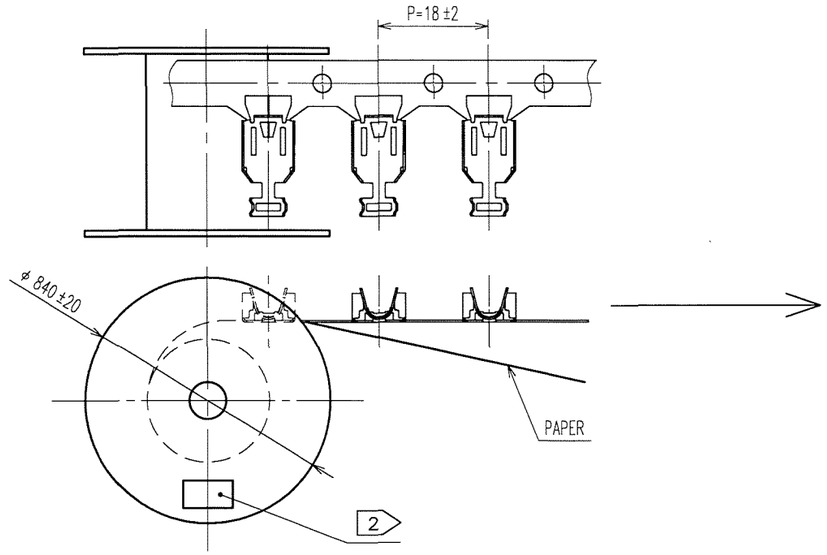

NOTES
1. This is delivered by a reel.QTY:4000pcs
2. Shown on a reel and a box is ; " Part No.", " Code No.", " Lot No.", " QTY"
3. Cut off a career as shown in fig-2.
4. This cable-clamping part is applied to φ 3.8mm cable.

HRS DRAWING FOR REFERENCE

NO.	MATERIAL	FINISH, REMARKS
1	STAINLESS STEEL	

CODE NO.(OLD)	DRAWN	DESIGNED	CHECKED	APPROVED	RELEASED
	Y.Takeuchi 06.11.13	Y.Takeuchi 06.11.13	H.Kobayashi '06.11.13	06.11.13	. .

SCALE 4 : 1	DRAWING NO. EDC3-125859	PART NO. ZX40-SLDB
UNITS mm	HRS HIROSE ELECTRIC CO., LTD	CODE NO. CL242-0004-0 1/1

TO

FORM NO.229