REVISION F

DO NOT SCALE FROM THIS PRINT

DESIGNED & DIMENSIONED IN MILLIMETERS[INCHES]

LPHS-XX-XX-X-RTX-XX

POWER POS (TOTAL)
-02, -04, -06, -08, -10, *-12, *-14

SIGNAL POS (TOTAL)
*-12, -16, -20, -24, -28, -32, *-36, *-40

PLATING SPECIFICATION
-L: 10 µ" SELECTIVE GOLD IN CONTACT AREA, MATTE TIN ON TAIL
-S: 30 µ" SELECTIVE GOLD IN CONTACT AREA, MATTE TIN ON TAIL (SEE NOTE 7)

OPTIONS
-GP: GUIDE POSTS (LEAVE BLANK FOR NO -GP OPTION)
-BLANK: NO GP OPTION

TAIL
-RT1:RA-TH, 1.58[.062] BOARD
-RT2: RA-TH, 2.36[.093] BOARD

(* = NOT TOOLED)

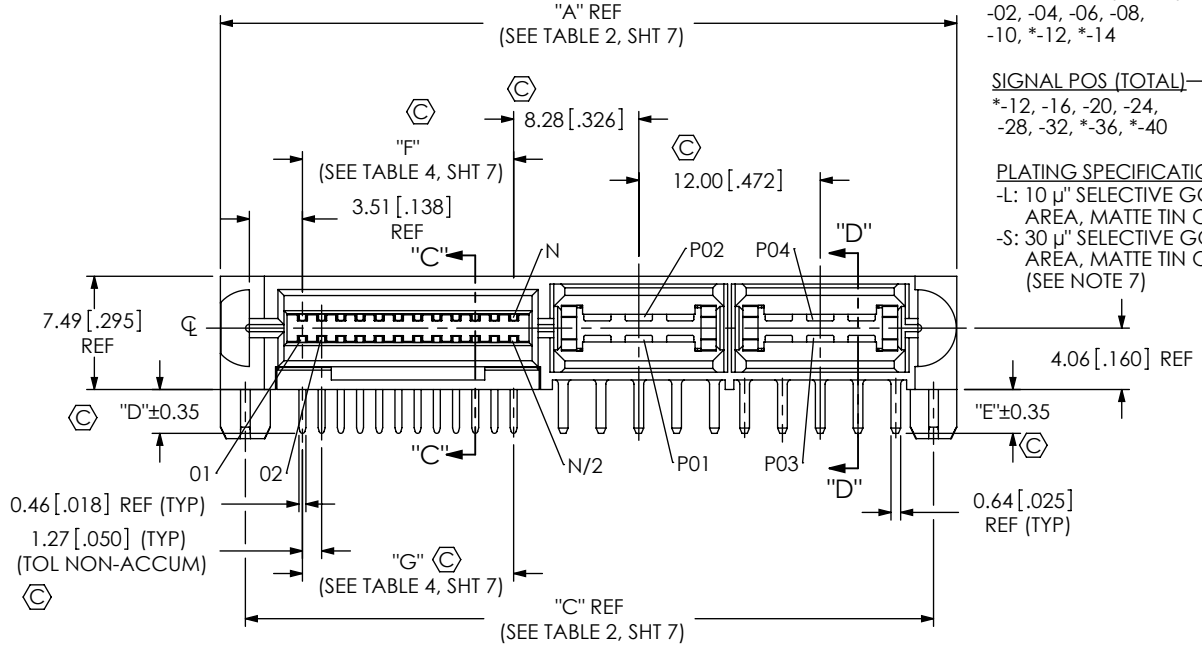

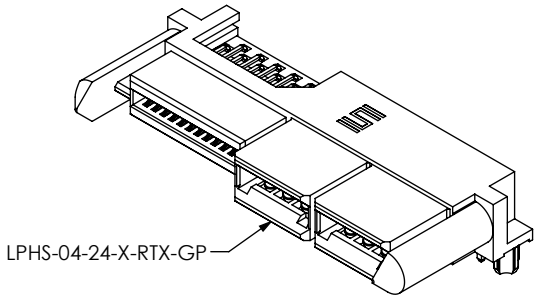

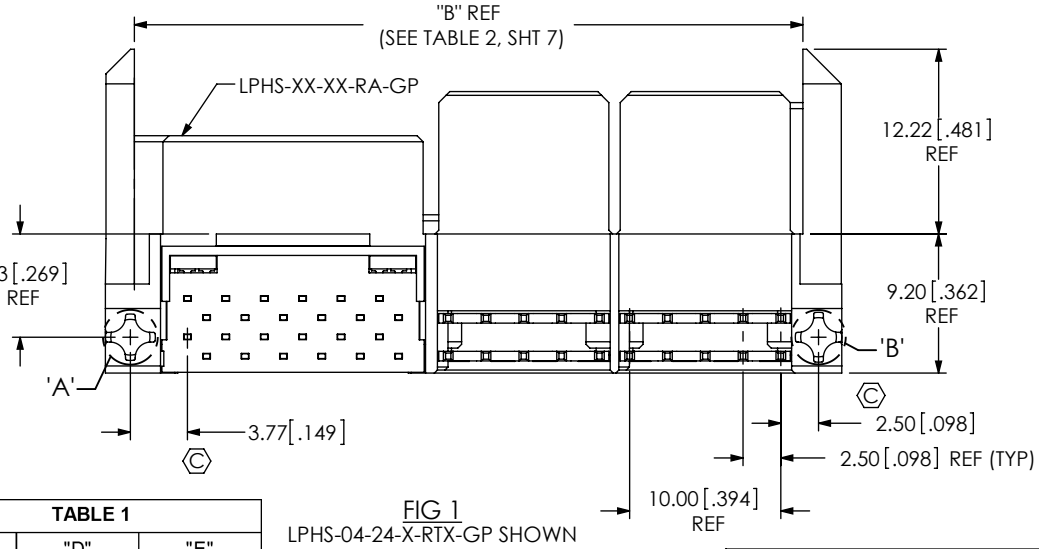

FIG 1
LPHS-04-24-X-RTX-GP SHOWN

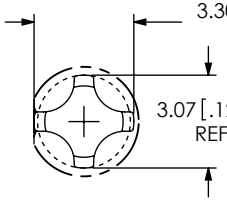

DETAIL 'A'
SCALE 4 : 1

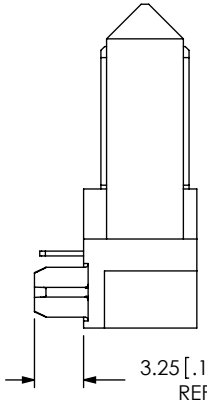

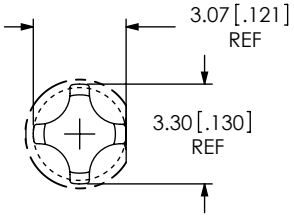

DETAIL 'B'
SCALE 4 : 1

TABLE 1		
TAIL	"D"	"E"
-RT1	2.90 [.114]	2.90 [.114]
-RT2	3.60 [.142]	3.60 [.142]

NOTES:

1. Ⓒ REPRESENTS A CRITICAL DIMENSION.
2. MINIMUM PUSHOUT FORCE: SIGNAL: 0.5 LBS, POWER PIN: 3.0 LBS.
3. MAXIMUM ALLOWABLE BOW: 0.15[.006] MM/MM AFTER ASSEMBLY.
4. MAXIMUM BURR ON SHEARED TAILS: 0.15[.006].
5. ALL P/N'S REQUIRE PRESSING TO PCB DUE TO ALIGNMENT PEGS, CONTACT SAMTEC FOR REQUIRED FIXTURES,
6. ASSEMBLIES TO BE PACKAGED IN TRAYS.
7. SELECTIVE PLATING LUBRICATED WITH ACCL-53T WHICH CAN BE DETECTED USING A UVA ULTRAVIOLET LIGHT SOURCE.

UNLESS OTHERWISE SPECIFIED, DIMENSIONS ARE IN MILLIMETERS.
TOLERANCES ARE:
DECIMALS X.X: ±0.3 [.01] X.XX: ±0.13 [.005] X.XXX: ±0.051 [.0020]
ANGLES 2 °

* PROPRIETARY NOTE *
THIS DOCUMENT CONTAINS CONFIDENTIAL AND PROPRIETARY INFORMATION AND ALL DESIGN, MANUFACTURING, REPRODUCTION, USE, PATENT RIGHTS AND SALES RIGHTS ARE EXPRESSLY RESERVED BY SAMTEC, INC. THIS DOCUMENT SHALL NOT BE DISCLOSED, IN WHOLE OR PART, TO ANY UNAUTHORIZED PERSON OR ENTITY NOR REPRODUCED, TRANSFERRED OR INCORPORATED IN ANY OTHER PROJECT IN ANY MANNER WITHOUT THE EXPRESS WRITTEN CONSENT OF SAMTEC, INC.

samtec
520 PARK EAST BLVD, NEW ALBANY, IN 47150
PHONE: 812-944-6733 FAX: 812-948-5047
e-Mail info@SAMTEC.com code 55322

MATERIAL: DO NOT SCALE DRAWING SHEET SCALE: 2:1

INSULATOR: LCP, COLOR: BLACK
SIGNAL CONTACT : BRASS
POWER CONTACT: COPPER ALLOY

DESCRIPTION: LPHS-RA SOCKETASSEMBLY

DWG. NO. LPHS-XX-XX-X-RTX-XX

BY: ROY LUO 12/13/2011 SHEET 1 OF 7

F:\DWG\MISC\MKTG\LPHS-XX-XX-X-RTX-XX-MKT.SLDDRW

REVISION F

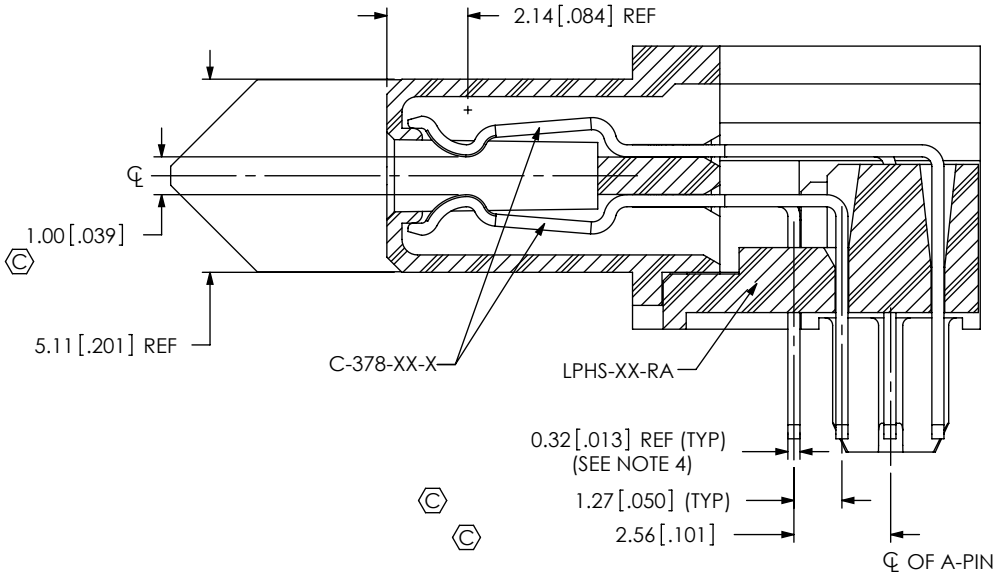

SECTION "C"-"C"
SCALE 5 : 1

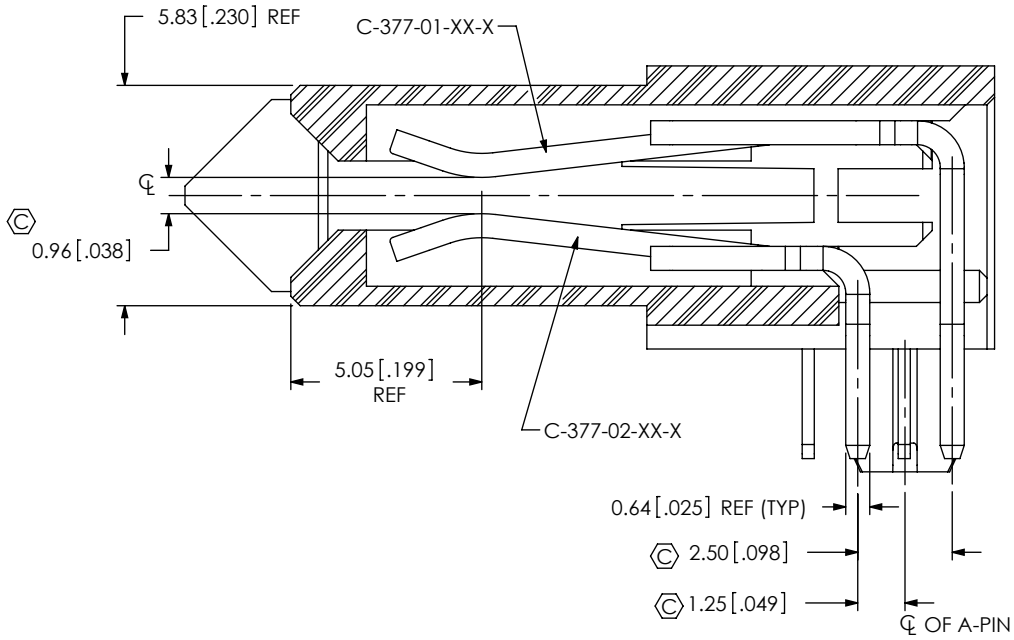

SECTION "D"-"D"
SCALE 5 : 1

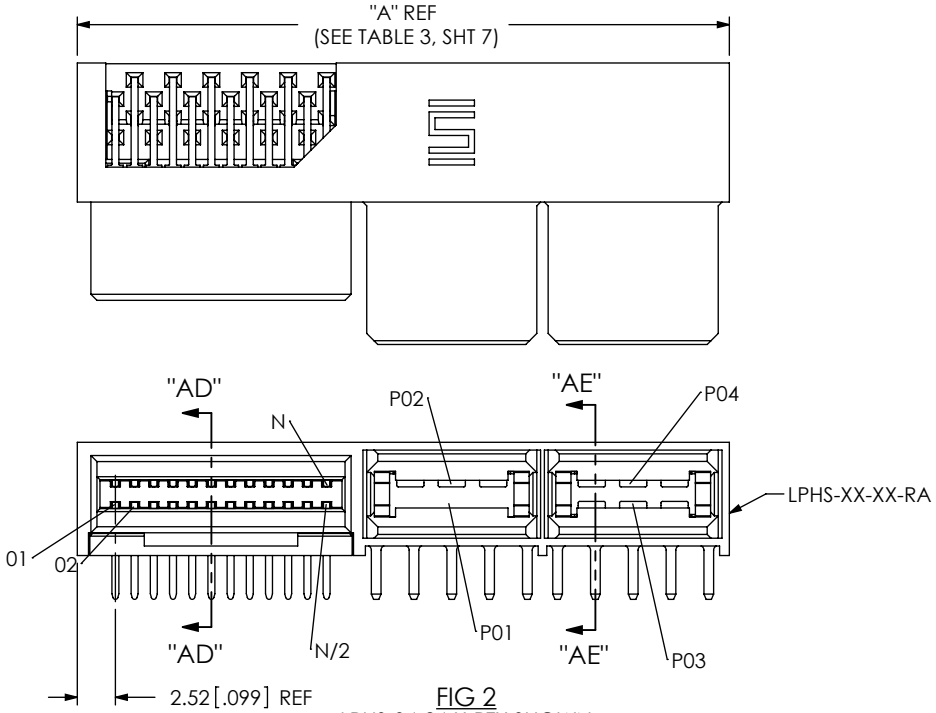

FIG 2
LPHS-04-24-X-RTX SHOWN
(DIFFERENT AS SHOWN,OTHERWISE SAME AS FIG 1)

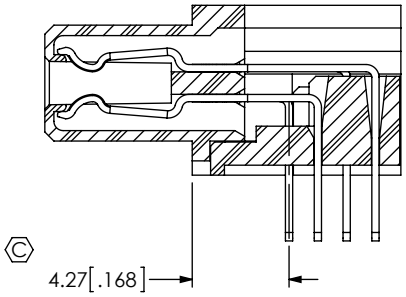

SECTION "AD"-"AD"
(DIFFERENT AS SHOWN,
OTHERWISE SAME AS SECTION "C"-"C")

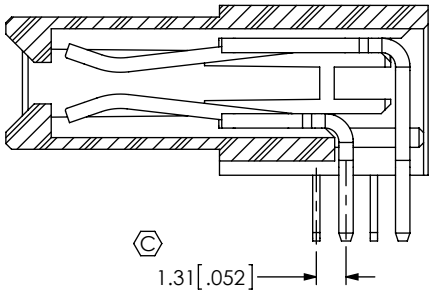

SECTION "AE"-"AE"
(DIFFERENT AS SHOWN,
OTHERWISE SAME AS SECTION "D"-"D")

* PROPRIETARY NOTE *

THIS DOCUMENT CONTAINS CONFIDENTIAL AND PROPRIETARY INFORMATION AND ALL DESIGN, MANUFACTURING, REPRODUCTION, USE, PATENT RIGHTS AND SALES RIGHTS ARE EXPRESSLY RESERVED BY SAMTEC, INC. THIS DOCUMENT SHALL NOT BE DISCLOSED, IN WHOLE OR PART, TO ANY UNAUTHORIZED PERSON OR ENTITY NOR REPRODUCED, TRANSFERRED OR INCORPORATED IN ANY OTHER PROJECT IN ANY MANNER WITHOUT THE EXPRESS WRITTEN CONSENT OF SAMTEC, INC.

DO NOT SCALE DRAWING

SHEET SCALE: 2:1

samtec
520 PARK EAST BLVD, NEW ALBANY, IN 47150
PHONE: 812-944-6733 FAX: 812-948-5047
e-Mail info@SAMTEC.com code 55322

DESCRIPTION: LPHS-RA SOCKETASSEMBLY

DWG. NO. LPHS-XX-XX-X-RTX-XX

BY: ROY LUO 12/13/2011 SHEET 2 OF 7

F:\DWG\MISC\MKTG\LPHS-XX-XX-X-RTX-XX-MKT.SLDDRW

REVISION F

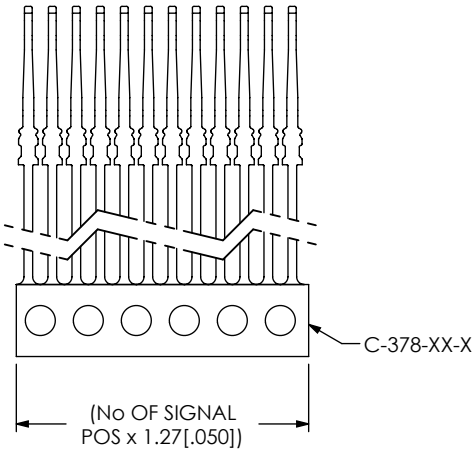

IN-PROCESS 1
CUT COMB & REMOVE TIE BARS FOR C-378-XX-X

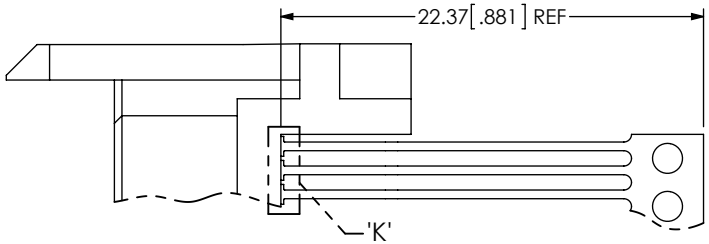

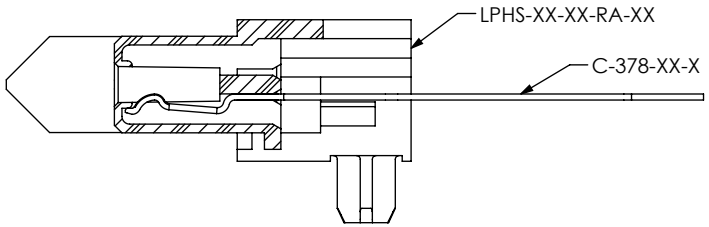

GP OPTION

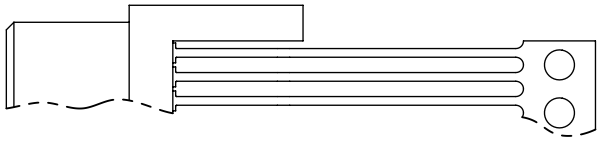

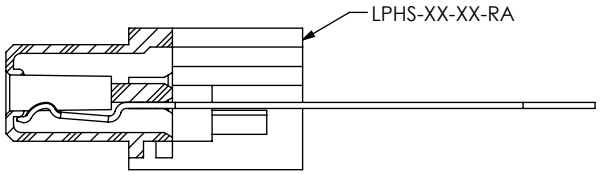

NO GP OPTION
(DIFFERENT AS SHOWN, OTHERWISE SAME AS GP OPTION)

IN-PROCESS 2
FILL SIGNAL BOTTOM ROW

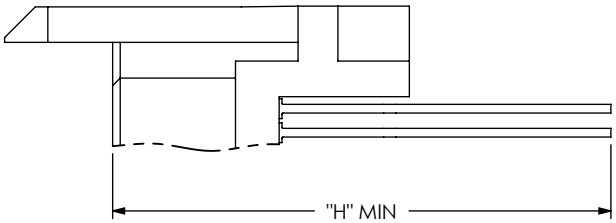

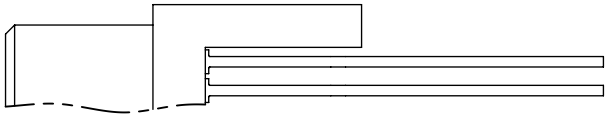

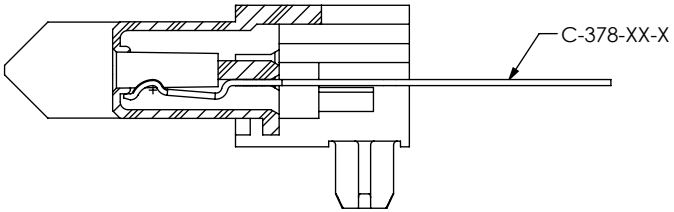

GP OPTION

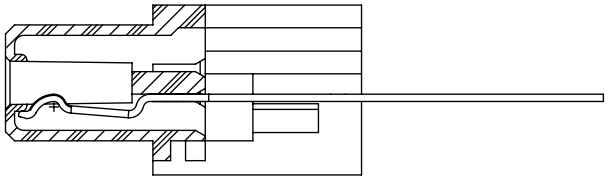

NO GP OPTION
(DIFFERENT AS SHOWN, OTHERWISE SAME AS GP OPTION)

IN-PROCESS 3
CUT OFF CARRIER

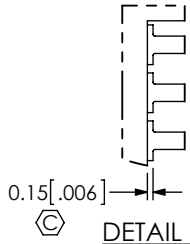

DETAIL 'K'
SCALE 5 : 1

TABLE 5	
TAIL	"H"
-RT1	19.36 [.762]
-RT2	20.06 [.790]

* PROPRIETARY NOTE *

THIS DOCUMENT CONTAINS CONFIDENTIAL AND PROPRIETARY INFORMATION AND ALL DESIGN, MANUFACTURING, REPRODUCTION, USE, PATENT RIGHTS AND SALES RIGHTS ARE EXPRESSLY RESERVED BY SAMTEC, INC. THIS DOCUMENT SHALL NOT BE DISCLOSED, IN WHOLE OR PART, TO ANY UNAUTHORIZED PERSON OR ENTITY NOR REPRODUCED, TRANSFERRED OR INCORPORATED IN ANY OTHER PROJECT IN ANY MANNER WITHOUT THE EXPRESS WRITTEN CONSENT OF SAMTEC, INC.

DO NOT SCALE DRAWING

SHEET SCALE: 2.5:1

samtec
520 PARK EAST BLVD, NEW ALBANY, IN 47150
PHONE: 812-944-6733 FAX: 812-948-5047
e-Mail info@SAMTEC.com code 55322

DESCRIPTION: LPHS-RA SOCKETASSEMBLY

DWG. NO. LPHS-XX-XX-X-RTX-XX

BY: ROY LUO 12/13/2011 SHEET 3 OF 7

F:\DWG\MISC\MKTG\LPHS-XX-XX-X-RTX-XX-MKT.SLDDRW

REVISION F

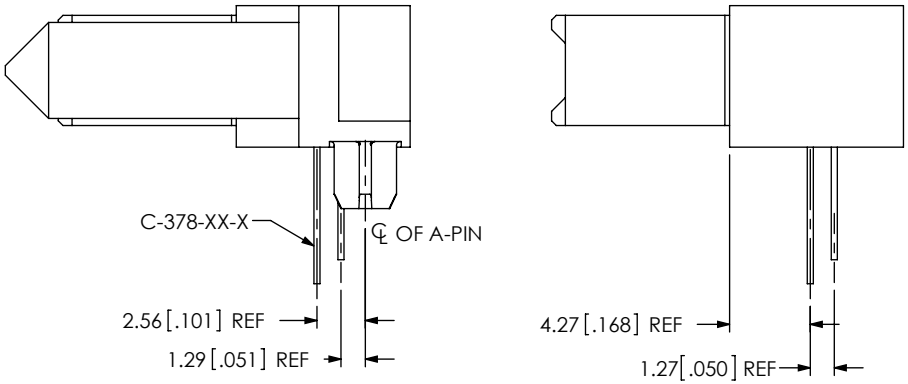

GP OPTION

NO GP OPTION

IN-PROCESS 4
FORM SIGNAL BOTTOM ROW

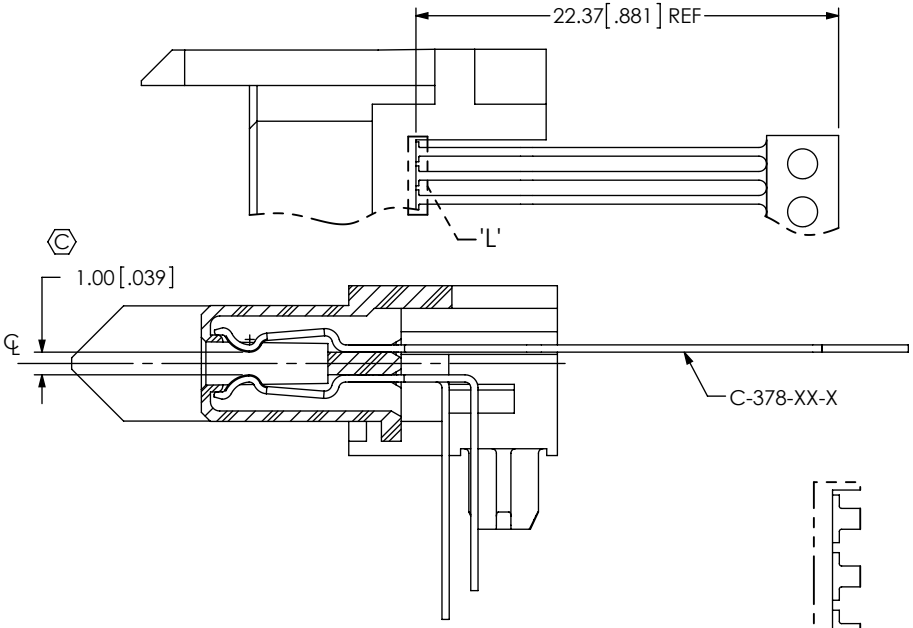

IN-PROCESS 5
(GP OPTION)
FILL SIGNAL TOP ROW

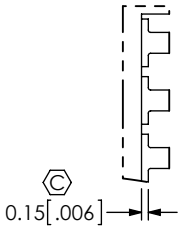

DETAIL 'L'
SCALE 6 : 1

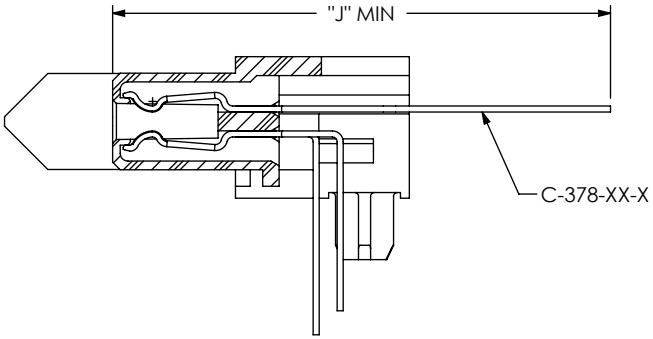

IN-PROCESS 6
(GP OPTION)
CUT OFF TOP ROW CARRIER

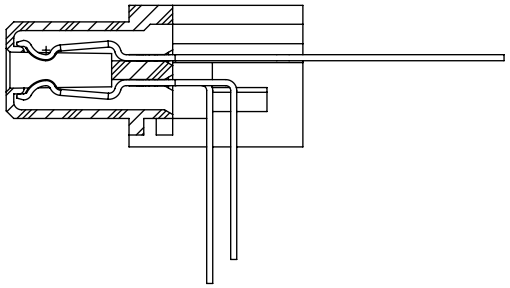

IN-PROCESS 6
(NO GP OPTION)
(DIFFERENT AS SHOWN, OTHERWISE SAME AS GP OPTION)
CUT OFF TOP ROW CARRIER

TABLE 6	
TAIL	"J"
-RT1	23.22 [.914]
-RT2	23.92 [.942]

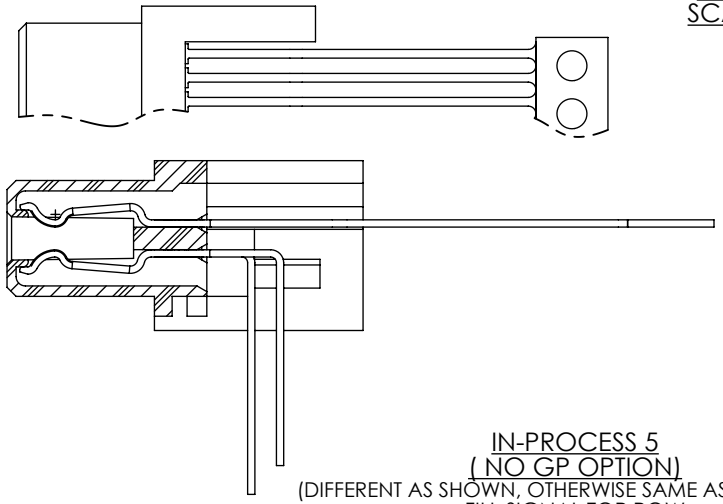

IN-PROCESS 5
(NO GP OPTION)
(DIFFERENT AS SHOWN, OTHERWISE SAME AS GP OPTION)
FILL SIGNAL TOP ROW

* PROPRIETARY NOTE *

THIS DOCUMENT CONTAINS CONFIDENTIAL AND PROPRIETARY INFORMATION AND ALL DESIGN, MANUFACTURING, REPRODUCTION, USE, PATENT RIGHTS AND SALES RIGHTS ARE EXPRESSLY RESERVED BY SAMTEC, INC. THIS DOCUMENT SHALL NOT BE DISCLOSED, IN WHOLE OR PART, TO ANY UNAUTHORIZED PERSON OR ENTITY NOR REPRODUCED, TRANSFERRED OR INCORPORATED IN ANY OTHER PROJECT IN ANY MANNER WITHOUT THE EXPRESS WRITTEN CONSENT OF SAMTEC, INC.

DO NOT SCALE DRAWING

SHEET SCALE: 2.5:1

samtec
520 PARK EAST BLVD, NEW ALBANY, IN 47150
PHONE: 812-944-6733 FAX: 812-948-5047
e-Mail info@SAMTEC.com code 55322

DESCRIPTION: LPHS-RA SOCKETASSEMBLY

DWG. NO. LPHS-XX-XX-X-RTX-XX

BY: ROY LUO 12/13/2011 SHEET 4 OF 7

REVISION F

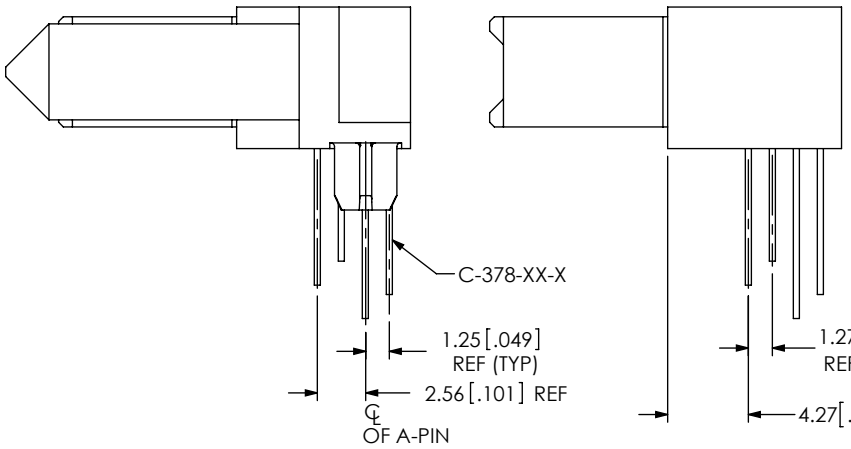

GP OPTION
FORM SIGNAL TOP ROW

NO GP OPTION
(DIFFERENT AS SHOWN, OTHERWISE SAME AS GP OPTION

IN-PROCESS 7
FORM SIGNAL TOP ROW

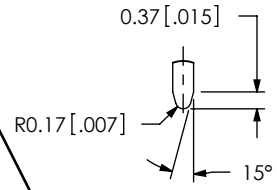

DETAIL 'W'
SCALE 6 : 1

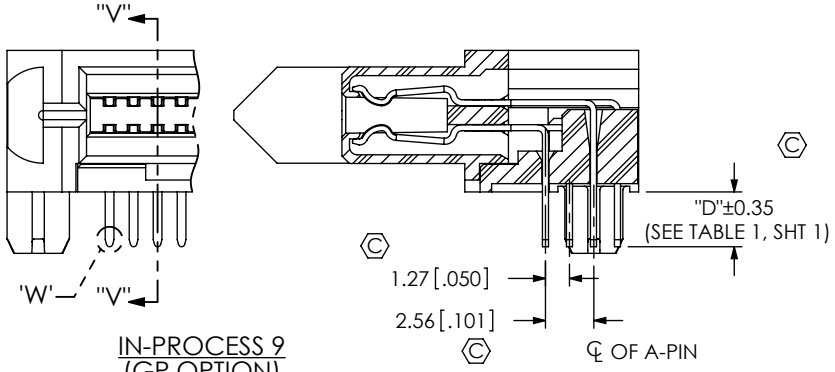

IN-PROCESS 9
(GP OPTION)
SHEAR TAIL & COIN PIN

SECTION "V"-"V"

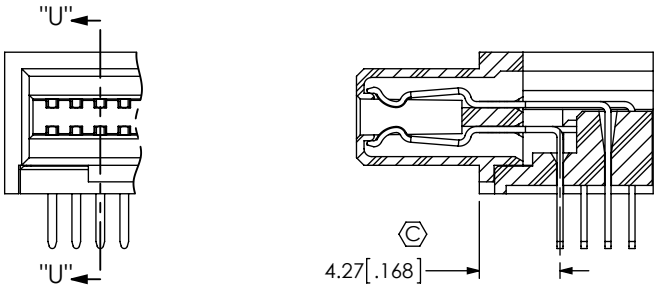

IN-PROCESS 9
(NO GP OPTION)
(DIFFERENT AS SHOWN, OTHERWISE SAME AS GP OPTION)
SHEAR TAIL & COIN PIN

SECTION "U"-"U"

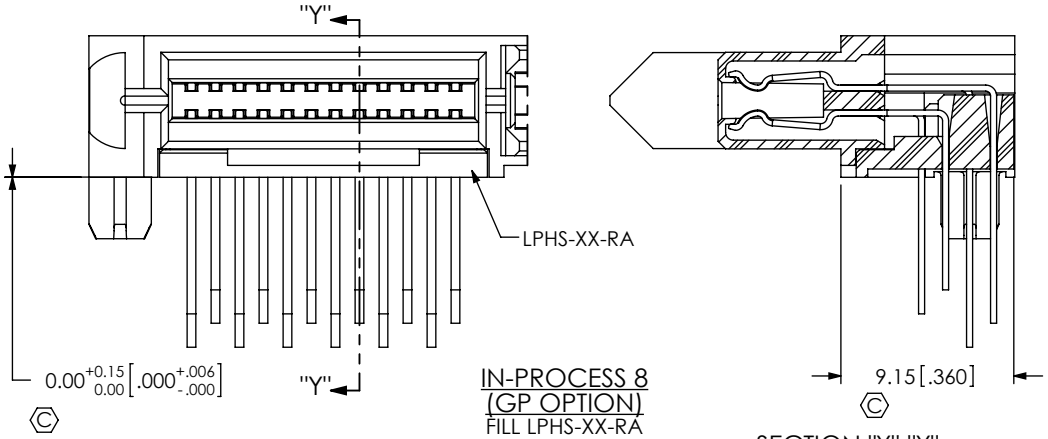

IN-PROCESS 8
(GP OPTION)
FILL LPHS-XX-RA

SECTION "Y"-"Y"

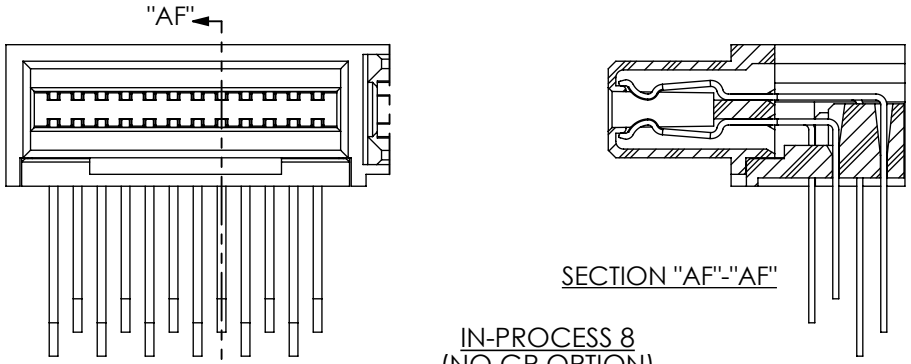

SECTION "AF"-"AF"

IN-PROCESS 8
(NO GP OPTION)
(DIFFERENT AS SHOWN, OTHERWISE SAME AS GP OPTION)
FILL LPHS-XX-RA

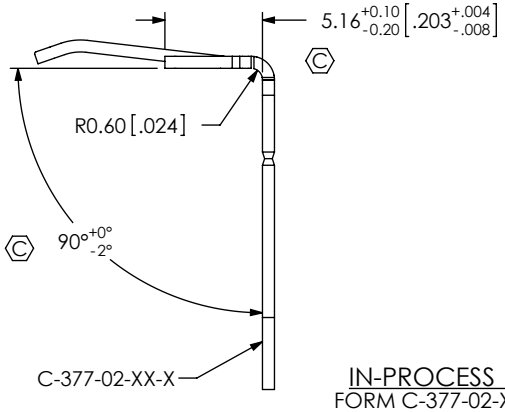

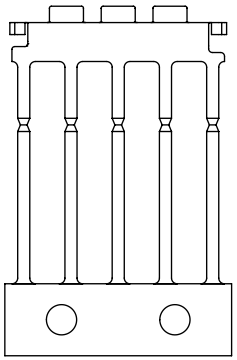

IN-PROCESS 10
FORM C-377-02-XX-X

PROPRIETARY NOTE

THIS DOCUMENT CONTAINS CONFIDENTIAL AND PROPRIETARY INFORMATION AND ALL DESIGN, MANUFACTURING, REPRODUCTION, USE, PATENT RIGHTS AND SALES RIGHTS ARE EXPRESSLY RESERVED BY SAMTEC, INC. THIS DOCUMENT SHALL NOT BE DISCLOSED, IN WHOLE OR PART, TO ANY UNAUTHORIZED PERSON OR ENTITY NOR REPRODUCED, TRANSFERRED OR INCORPORATED IN ANY OTHER PROJECT IN ANY MANNER WITHOUT THE EXPRESS WRITTEN CONSENT OF SAMTEC, INC.

DO NOT SCALE DRAWING

SHEET SCALE: 2.5:1

samtec
520 PARK EAST BLVD, NEW ALBANY, IN 47150
PHONE: 812-944-6733 FAX: 812-948-5047
e-Mail info@SAMTEC.com code 55322

DESCRIPTION: LPHS-RA SOCKETASSEMBLY

DWG. NO. LPHS-XX-XX-X-RTX-XX

BY: ROY LUO 12/13/2011 SHEET 5 OF 7

REVISION F

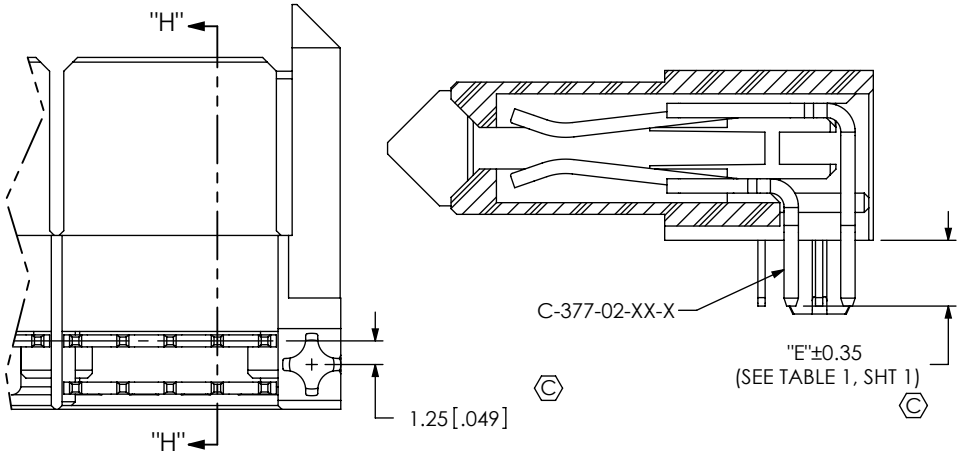

IN-PROCESS 11
(GP OPTION)
FILL POWER BOTTOM ROW

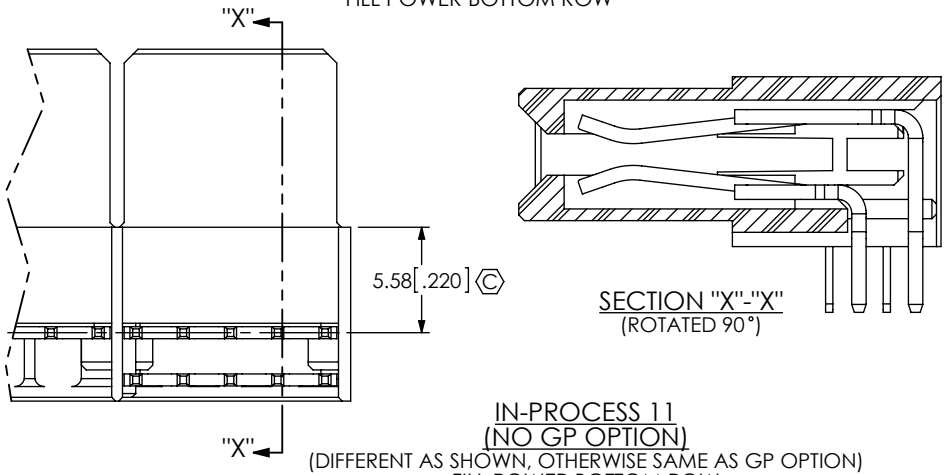

SECTION "X"-"X"
(ROTATED 90°)

IN-PROCESS 11
(NO GP OPTION)
(DIFFERENT AS SHOWN, OTHERWISE SAME AS GP OPTION)
FILL POWER BOTTOM ROW

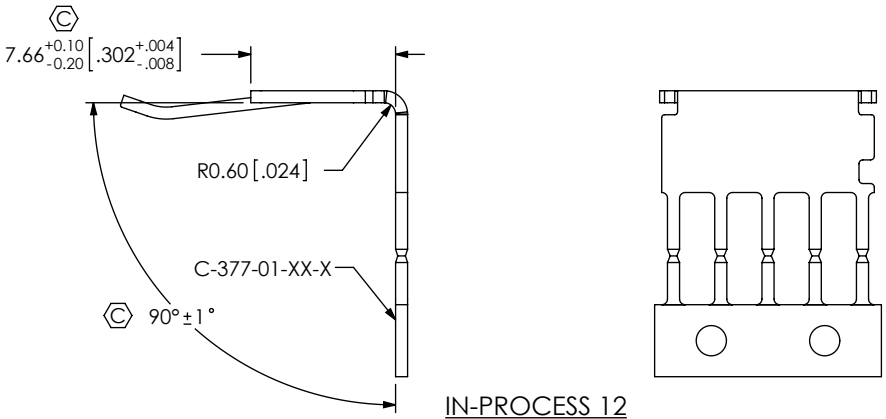

IN-PROCESS 12
FORM C-377-01-XX-X

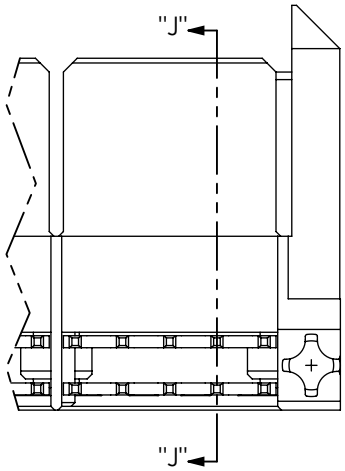

SECTION "H"-"H"
(ROTATED 90°)

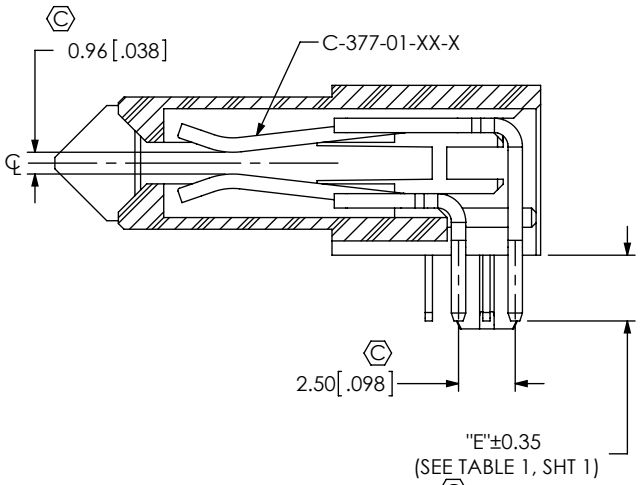

IN-PROCESS 13
(GP OPTION)
FILL POWER TOP ROW

SECTION "J"-"J"
(ROTATED 90°)

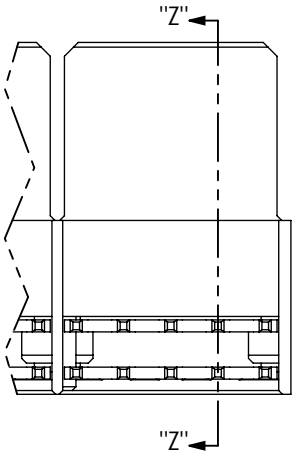

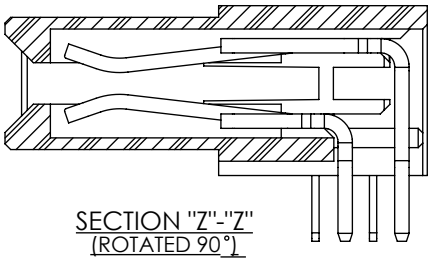

SECTION "Z"-"Z"
(ROTATED 90°)

IN-PROCESS 13
(NO GP OPTION)
(DIFFERENT AS SHOWN, OTHERWISE SAME AS GP OPTION)
FILL POWER TOP ROW

* PROPRIETARY NOTE *

THIS DOCUMENT CONTAINS CONFIDENTIAL AND PROPRIETARY INFORMATION AND ALL DESIGN, MANUFACTURING, REPRODUCTION, USE, PATENT RIGHTS AND SALES RIGHTS ARE EXPRESSLY RESERVED BY SAMTEC, INC. THIS DOCUMENT SHALL NOT BE DISCLOSED, IN WHOLE OR PART, TO ANY UNAUTHORIZED PERSON OR ENTITY NOR REPRODUCED, TRANSFERRED OR INCORPORATED IN ANY OTHER PROJECT IN ANY MANNER WITHOUT THE EXPRESS WRITTEN CONSENT OF SAMTEC, INC.

DO NOT SCALE DRAWING

SHEET SCALE: 2.5:1

samtec
520 PARK EAST BLVD, NEW ALBANY, IN 47150
PHONE: 812-944-6733 FAX: 812-948-5047
e-Mail info@SAMTEC.com code 55322

DESCRIPTION: LPHS-RA SOCKETASSEMBLY

DWG. NO. LPHS-XX-XX-X-RTX-XX

BY: ROY LUO 12/13/2011 SHEET 6 OF 7

REVISION F

TABLE 2 SIGNAL/POWER COMBO -A-GP												
	02 POWER POS			04 POWER POS			06 POWER POS			08 POWER POS		
SIGNAL POS	"A"	"B"	"C"	"A"	"B"	"C"	"A"	"B"	"C"	"A"	"B"	"C"
* 12	29.09 [1.145]	24.60 [0.969]	25.90 [1.020]	41.09 [1.618]	36.60 [1.441]	37.90 [1.492]	53.09 [2.090]	48.60 [1.913]	49.90 [1.965]	65.09 [2.563]	60.60 [2.386]	61.90 [2.437]
16	31.63 [1.245]	27.14 [1.069]	28.44 [1.120]	43.63 [1.718]	39.14 [1.541]	40.44 [1.592]	55.63 [2.190]	51.14 [2.013]	52.44 [2.065]	67.63 [2.663]	63.14 [2.486]	64.44 [2.537]
20	34.17 [1.345]	29.68 [1.169]	30.98 [1.220]	46.17 [1.818]	41.68 [1.641]	42.98 [1.692]	58.17 [2.290]	53.68 [2.113]	54.98 [2.165]	70.17 [2.763]	65.68 [2.586]	66.98 [2.637]
24	36.71 [1.445]	32.22 [1.269]	33.52 [1.320]	48.71 [1.918]	44.22 [1.741]	45.52 [1.792]	60.71 [2.390]	56.22 [2.213]	57.52 [2.265]	72.71 [2.863]	68.22 [2.686]	69.52 [2.737]
28	39.25 [1.545]	34.76 [1.369]	36.06 [1.420]	51.25 [2.018]	46.76 [1.841]	48.06 [1.892]	63.25 [2.490]	58.76 [2.313]	60.06 [2.365]	75.25 [2.963]	70.76 [2.786]	72.06 [2.837]
32	41.79 [1.645]	37.30 [1.469]	38.60 [1.520]	53.79 [2.118]	49.30 [1.941]	50.60 [1.992]	65.79 [2.590]	61.30 [2.413]	62.60 [2.465]	77.79 [3.063]	73.30 [2.886]	74.60 [2.937]
* 36	44.33 [1.745]	39.84 [1.569]	41.14 [1.620]	56.33 [2.218]	51.84 [2.041]	53.14 [2.092]	68.33 [2.690]	63.84 [2.513]	65.14 [2.565]	80.33 [3.163]	75.84 [2.986]	77.14 [3.037]
* 40	46.87 [1.845]	42.38 [1.669]	43.68 [1.720]	58.87 [2.318]	54.38 [2.141]	55.68 [2.192]	70.87 [2.790]	66.38 [2.613]	67.68 [2.665]	82.87 [3.263]	78.38 [3.086]	79.68 [3.137]

(* = NOT TOOLED)

TABLE 2 SIGNAL/POWER COMBO -A-GP CONTINUED									
	10 POWER POS			*12 POWER POS			*14 POWER		
SIGNAL POS	"A"	"B"	"C"	"A"	"B"	"C"	"A"	"B"	"C"
* 12	77.09 [3.035]	72.60 [2.858]	73.90 [2.909]	89.09 [3.507]	84.60 [3.331]	85.90 [3.382]	101.09 [3.980]	96.60 [3.803]	97.90 [3.854]
16	79.63 [3.135]	75.14 [2.958]	76.44 [3.009]	91.63 [3.607]	87.14 [3.431]	88.44 [3.482]	103.63 [4.080]	99.14 [3.903]	100.44 [3.954]
20	82.17 [3.235]	77.68 [3.058]	78.98 [3.109]	94.17 [3.707]	89.68 [3.531]	90.98 [3.582]	106.17 [4.180]	101.68 [4.003]	102.98 [4.054]
24	84.71 [3.335]	80.22 [3.158]	81.52 [3.209]	96.71 [3.807]	92.22 [3.631]	93.52 [3.682]	108.71 [4.280]	104.22 [4.103]	105.52 [4.154]
28	87.25 [3.435]	82.76 [3.258]	84.06 [3.309]	99.25 [3.907]	94.76 [3.731]	96.06 [3.782]	111.25 [4.380]	106.76 [4.203]	108.06 [4.254]
32	89.79 [3.535]	85.30 [3.358]	86.60 [3.409]	101.79 [4.007]	97.30 [3.831]	98.60 [3.882]	113.79 [4.480]	109.30 [4.303]	110.60 [4.354]
* 36	92.33 [3.635]	87.84 [3.458]	89.14 [3.509]	104.33 [4.107]	99.84 [3.931]	101.14 [3.982]	116.33 [4.580]	111.84 [4.403]	113.14 [4.454]
* 40	94.87 [3.735]	90.38 [3.558]	91.68 [3.609]	106.87 [4.207]	102.38 [4.031]	103.68 [4.082]	118.87 [4.680]	114.38 [4.503]	115.68 [4.554]

(* = NOT TOOLED)

TABLE 3 SIGNAL/POWER COMBO (NO -GP OPTIONS NOT RELEASED)							
	02 POWER	04 POWER	06 POWER	08 POWER	10 POWER	*12 POWER	*14 POWER
SIGNAL POS	"A"	"A"	"A"	"A"	"A"	"A"	"A"
* 12	23.42 [0.922]	35.42 [1.394]	47.42 [1.867]	59.42 [2.339]	71.42 [2.812]	83.42 [3.284]	95.42 [3.757]
16	25.96 [1.022]	37.96 [1.494]	49.96 [1.967]	61.96 [2.439]	73.96 [2.912]	85.96 [3.384]	97.96 [3.857]
20	28.50 [1.122]	40.50 [1.594]	52.50 [2.067]	64.50 [2.539]	76.50 [3.012]	88.50 [3.484]	100.50 [3.957]
24	31.04 [1.222]	43.04 [1.694]	55.04 [2.167]	67.04 [2.639]	79.04 [3.112]	91.04 [3.584]	103.04 [4.057]
28	33.58 [1.322]	45.58 [1.794]	57.58 [2.267]	69.58 [2.739]	81.58 [3.212]	93.58 [3.684]	105.58 [4.157]
32	36.12 [1.422]	48.12 [1.894]	60.12 [2.367]	72.12 [2.839]	84.12 [3.312]	96.12 [3.784]	108.12 [4.257]
* 36	38.66 [1.522]	50.66 [1.994]	62.66 [2.467]	74.66 [2.939]	86.66 [3.412]	98.66 [3.884]	110.66 [4.357]
* 40	41.20 [1.622]	53.20 [2.094]	65.20 [2.567]	77.20 [3.039]	89.20 [3.512]	101.20 [3.984]	113.20 [4.457]

(* = NOT TOOLED)

TABLE 4		
SIGNAL POS	"F"	"G"
* 12	6.35 [0.250]	6.35 [0.250]
16	8.89 [0.350]	8.89 [0.350]
20	11.43 [0.450]	11.43 [0.450]
24	13.97 [0.550]	13.97 [0.550]
28	16.51 [0.650]	16.51 [0.650]
32	19.05 [0.750]	19.05 [0.750]
* 36	21.59 [0.850]	21.59 [0.850]
* 40	24.13 [0.950]	24.13 [0.950]

(* = NOT TOOLED)

F:\DWG\MISC\MKTG\LPHS-XX-XX-X-RTX-XX-MKT.SLDDRW

* PROPRIETARY NOTE *

THIS DOCUMENT CONTAINS CONFIDENTIAL AND PROPRIETARY INFORMATION AND ALL DESIGN, MANUFACTURING, REPRODUCTION, USE, PATENT RIGHTS AND SALES RIGHTS ARE EXPRESSLY RESERVED BY SAMTEC, INC. THIS DOCUMENT SHALL NOT BE DISCLOSED, IN WHOLE OR PART, TO ANY UNAUTHORIZED PERSON OR ENTITY NOR REPRODUCED, TRANSFERRED OR INCORPORATED IN ANY OTHER PROJECT IN ANY MANNER WITHOUT THE EXPRESS WRITTEN CONSENT OF SAMTEC, INC.

DO NOT SCALE DRAWING

SHEET SCALE: 2:1

samtec

520 PARK EAST BLVD, NEW ALBANY, IN 47150
PHONE: 812-944-6733 FAX: 812-948-5047
e-Mail info@SAMTEC.com code 55322

DESCRIPTION: LPHS-RA SOCKETASSEMBLY

DWG. NO. LPHS-XX-XX-X-RTX-XX

BY: ROY LUO 12/13/2011 SHEET 7 OF 7