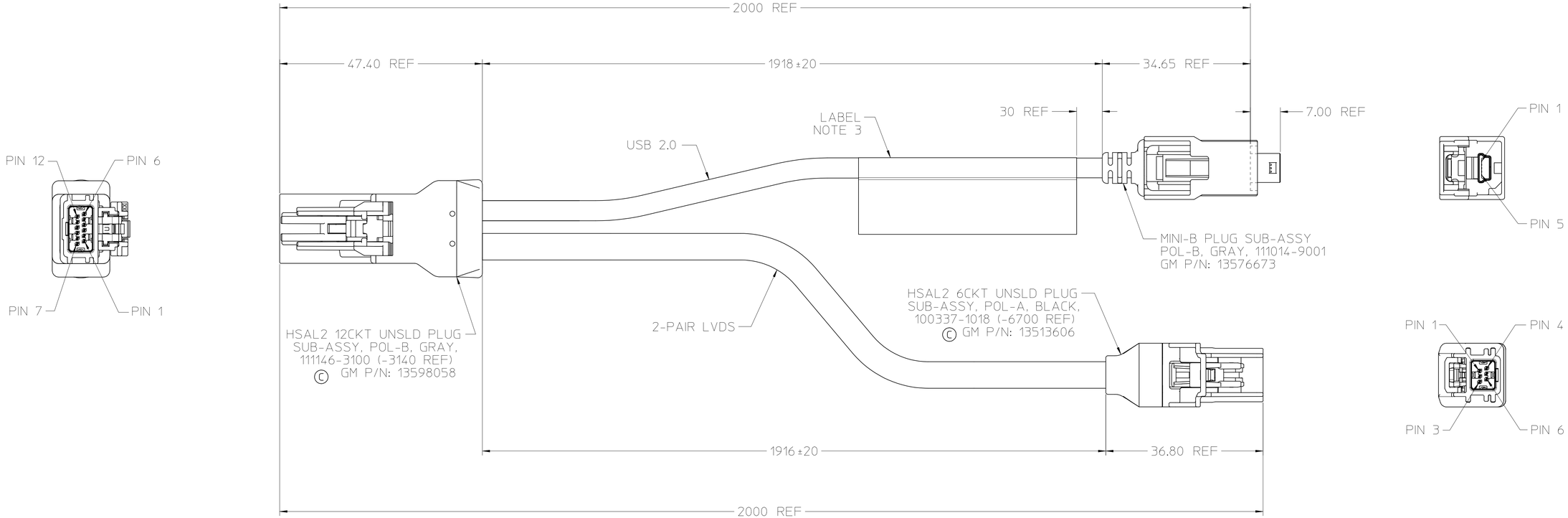

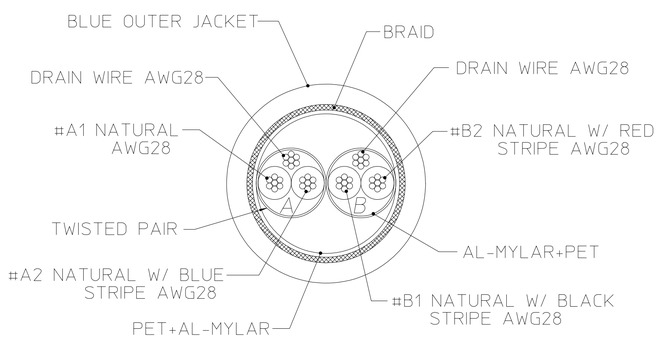

CABLE CONSTRUCTION
2-PAIR LVDS
©

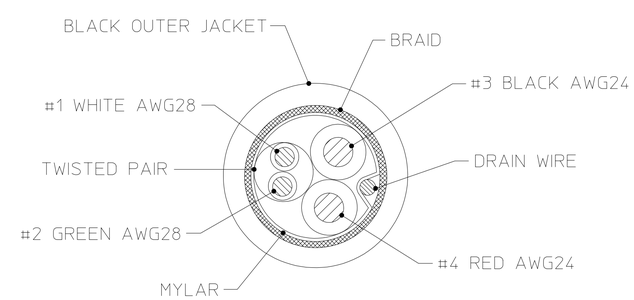

CABLE CONSTRUCTION
USB 2.0

NOTES:

1. PRODUCT SPECIFICATION: PS-XXXXXXX.
2. PACKAGING SPECIFICATION: PK-100216-XXX.
3. IDENTIFICATION LABEL MUST DISPLAY CUSTOMER PART NUMBER, SUPPLIER PART NUMBER, DATE CODE (YYYYMMDD), REVISION, AND LOGO.
4. PART MUST CONFORM TO THE LATEST REVISION OF SAE/USCAR-30 AND USB 2.0.
5. LEAD FREE, NO ROHS EXEMPTIONS.

CUSTOMER P/N
MOLEX P/N REV YYYYMMDDX
Made in "Country of Origin"
MOLEX LOGO
MOLEX P/N REV YYYYMMDDX
CUSTOMER P/N

LABEL FORMAT

LAST LETTER OF DATE CODE "X" = PRODUCTION SHIFT CODE.
BAR CODE = MOLEX MATERIAL NUMBER.
Country of Origin = NAME OF COUNTRY OF MANUFACTURING PLANT.

SEE SHEET 2			
EC NO: CPG2016-2949			
DRWN:HEMARTINEZ	2016/01/06		
CH'KD:JJPAWLICKI	2016/01/06		
APPR:JJPAWLICKI	2016/02/09		
REV	DESCRIPTION		

QUALITY SYMBOLS: =0, =0, =0

GENERAL TOLERANCES (UNLESS SPECIFIED)

	mm	INCH
4 PLACES	± ---	± ---
3 PLACES	± ---	± ---
2 PLACES	± 0.25	± ---
1 PLACE	± 0.5	± ---
0 PLACE	± ---	± ---
ANGULAR ± 3 °		

DRAFT WHERE APPLICABLE MUST REMAIN WITHIN DIMENSIONS

DIMENSION STYLE: MM ONLY
SCALE: 2:1
DESIGN UNITS: METRIC
THIRD ANGLE PROJECTION

DRAWN BY	HEMARTINEZ	DATE 2015/08/21
CHECKED BY	JJPAWLICKI	DATE 2015/08/21
APPROVED BY	KMONROE	DATE 2015/09/04

TITLE: USB/2P LVDS Y-CABLE ASSY HSAL2 12CT PLG TO HSALII 6CKT PLUG & MINI-B PLUG

molex

MATERIAL NO. 1002161003
DOCUMENT NO. RSD-100216-003
SHEET NO. 1 OF 2
SIZE D

THIS DRAWING CONTAINS INFORMATION THAT IS PROPRIETARY TO MOLEX INCORPORATED AND SHOULD NOT BE USED WITHOUT WRITTEN PERMISSION

DATE	REV	DESCRIPTION
2015/08/27	A	ORIGINAL RELEASE
2015/09/03	B	CHANGED HSAL2 6CKT UNSLD PLUG DESIGN & REF. SUBASSY MAT. NO. 100337-6700 was 111060-1001. REVISED DIMS: 1916±20 was 1902±20, 36.80 REF was 50.80
2016/01/29	C	REV'D HSAL2 12CKT UNSLD PLUG SUBASSY MAT. NO. 111146-3100 (-3140 REF) was -8100 REV'D HSAL2 6CKT UNSLD PLUG SUBASSY MAT. NO. 100337-1018 (-6700 REF) was -6700. & UPDATED GM P/N. UPDATED CABLE CROSS SECTION WIRE COLORS. SHEET 2: WIRING DIAGRAM, HSAL2 6CKT UNSLD PLUG SUB-ASSY: PIN #2 TPD+ was TPD-, PIN #3 TPD- was TPD+, PIN #4 TPE+ was DRAIN E, PIN #6 DRAIN E was TPE+. UPDATED WIRE COLORS.

©

WIRING DIAGRAM

	SIGNAL NAME	PIN #	WIRE COLORS	WIRE COLORS	PIN #	SIGNAL NAME	
HSAL2 12CKT UNSEALED PLUG 2P LVDS/USB	DRAIN D	1	DRAIN	DRAIN	1	DRAIN D	HSAL2 6-CKT UNSEALED PLUG 2-PAIR LVDS
	TPD+	2	NATURAL	NATURAL	2	TPD+	
	TPD-	3	NATURAL W/ BLUE STRIPE	NATURAL W/ BLUE STRIPE	3	TPD-	
	DRAIN E	4	DRAIN	NATURAL W/ RED STRIPE	4	TPE+	
	TPE+	5	NATURAL W/ RED STRIPE	NATURAL W/ BLACK STRIPE	5	TPE-	
	TPE-	6	NATURAL W/ BLACK STRIPE	DRAIN	6	DRAIN E	
	VBUS	7	RED	--	--	--	MINI-B PLUG USB 2.0
	NO CONNECT	8	--	RED	1	VBUS	
	D+	9	GREEN	WHITE	2	D-	
	D-	10	WHITE	GREEN	3	D+	
	NO CONNECT	11	--	--	4	NO CONNECT	
	GND	12	BLACK	BLACK	5	GND	
	BRAID(S)	SHIELD	BRAID(S)	BRAID/DRAIN	SHIELD	BRAID/DRAIN	

SEE REV. TABLE
EC NO: CPG2014-1323
DRWN:HEMARTINEZ 2016/01/06
CHKD:JJPAWLICKI 2016/01/06
APPR:JJPAWLICKI 2016/02/09
DESCRIPTION
C
REV

QUALITY SYMBOLS
F =0
G =0
H =0

GENERAL TOLERANCES (UNLESS SPECIFIED)

	mm	INCH
4 PLACES	± ---	± ---
3 PLACES	± ---	± ---
2 PLACES	± 0.25	± ---
1 PLACE	± 0.5	± ---
0 PLACE	± ---	± ---
ANGULAR ± 3 °		

DRAFT WHERE APPLICABLE MUST REMAIN WITHIN DIMENSIONS

DIMENSION STYLE: MM ONLY
SCALE: 2:1
DESIGN UNITS: METRIC
THIRD ANGLE PROJECTION

DRAWN BY: HEMARTINEZ DATE: 2015/08/21
CHECKED BY: JJPAWLICKI DATE: 2015/08/21
APPROVED BY: KMONROE DATE: 2015/09/04

TITLE: USB/2P LVDS Y-CABLE ASSY HSAL2 12CT PLG TO HSALII 6CKT PLUG & MINI-B PLUG

molex

MATERIAL NO.: 1002161003
DOCUMENT NO.: RSD-100216-003
SHEET NO.: 2 OF 2
SIZE: D

THIS DRAWING CONTAINS INFORMATION THAT IS PROPRIETARY TO MOLEX INCORPORATED AND SHOULD NOT BE USED WITHOUT WRITTEN PERMISSION