a : 2 : RL

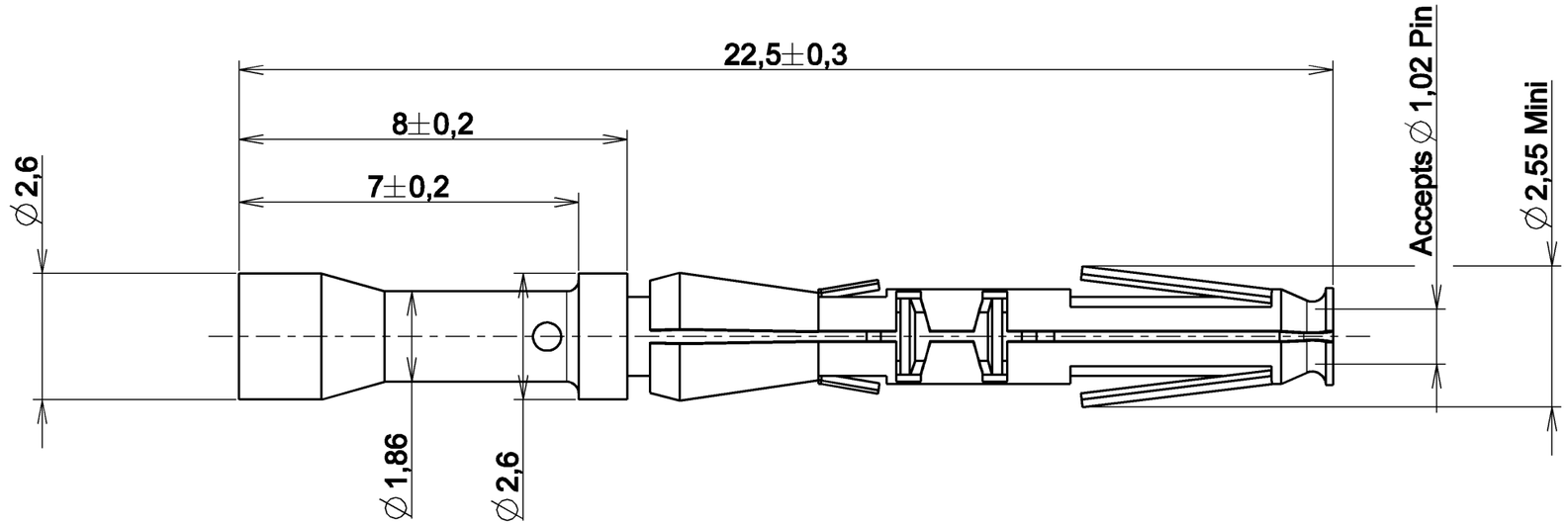

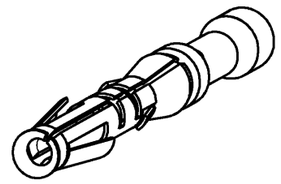

ECHELLE 4/1

Notes :

-Machined contact
-Extraction tool : RX20D44
-Crimping tool :S20RCM

Material :

-Contact body:hight conductive copper alloy
:plating: K : 0.4 micron gold over nickel
-Retaining spring:stainless steel

Performance Characteristics :

-Contact retention in the body:50N max
-Contact insertion force:5N max
-Contact separation force:2N min
-Current rating:7.5 Amps
-Contact resistance:6mΩ max
-Dielectric withstanding voltage:1500 Vrms min
-Diameter over insulation 1.20 mm min up to 1.60 mm max
-Section of wire 0.32 mm2 min up to 0.50 mm2 max
-Wire strip length : 4.8 mm

P/N : RC20W3K

ISS	DATE	Latest modification - by:	MOD N°
A	04/03/11	FIRST ISSUE	21654

Designed by:	*MOREAU F.* Date: 04/03/11	CUSTOMER DRAWING	
TITLE	FEMALE CRIMP CONTACT 22 - 20 CONNECTOR UTOW		
Scale 8/1		General linear Tolerances: ± 0.1	NPRDS / PROJECT RC
SOURIAU Connection Technology	WWW.SOURIAU.COM		This document is the property of SOURIAU It must not be reproduced or communicated without permission
FORMAT A3	SOURIAU DRG N° RC20W3K-C01		SHEET 1 / 1