M-12178 | 2

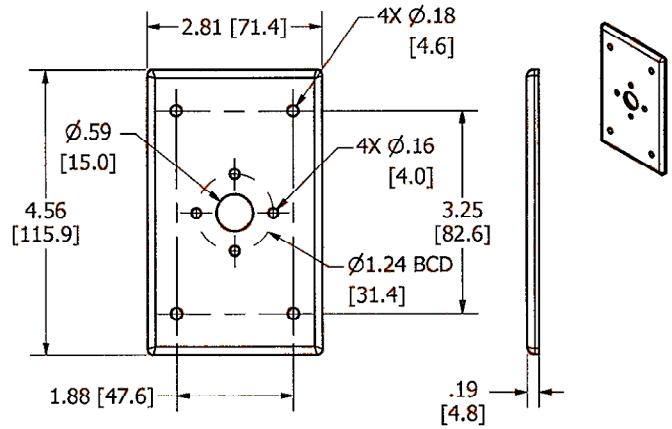

CAT NO. HAP1
NOTES:
1. MATERIAL: ALUMINUM BODY WITH GRAY POWDER COAT FINISH.
2. GASKET & MOUNTING HARDWARE INCLUDED.
3. FOR USE WITH FS SERIES BOXES, SOLD SEPARATELY.
4. ALL DIMENSIONS ARE IN INCHES AND [MILLIMETERS].

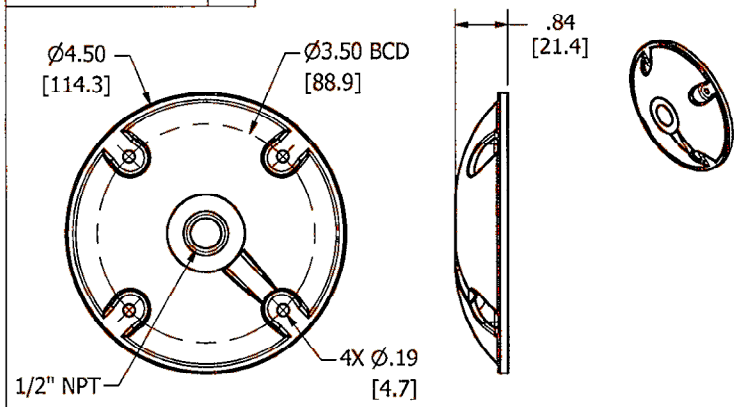

CAT NO. HAP2
NOTES:
1. COVER: ALUMINUM BODY WITH GRAY POWDER COAT FINISH.
2. GASKET & MOUNTING HARDWARE INCLUDED.
3. FOR USE WITH VJ SERIES BOXES, SOLD SEPARATELY.
4. ALL DIMENSIONS ARE IN INCHES AND [MILLIMETERS].

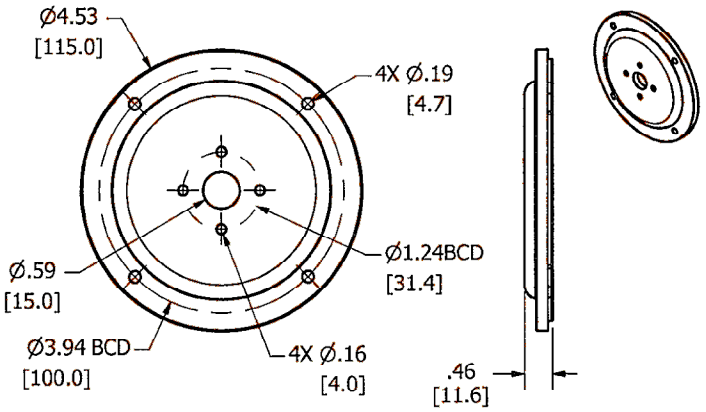

CAT NO. HAP3
NOTES:
1. MATERIAL: GRAY THERMOPLASTIC
2. GASKETS & MOUNTING HARDWARE INCLUDED.
3. FOR USE WITH NV2 SERIES BOXES, SOLD SEPARATELY.
4. ALL DIMENSIONS ARE IN INCHES AND [MILLIMETERS].

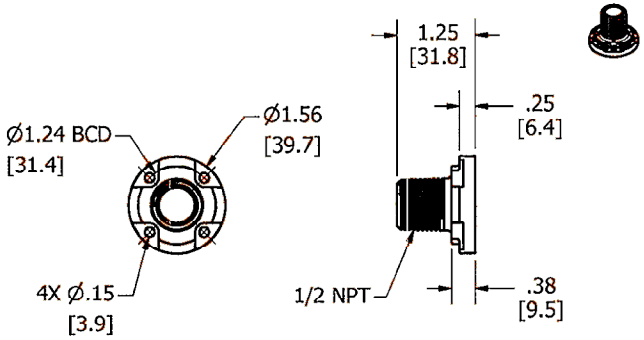

CAT NO. HAP4
NOTES:
1. MOUNTING HUB MATERIAL: GRAY THERMOPLASTIC
2. ALL DIMENSIONS ARE IN INCHES AND [MILLIMETERS].

CODE 74545

LIST OF PARTS

DESCRIPTION	MATERIAL	FINISH
	SEE FIELD NOTES	

SYM	DESCRIPTION	APP	DATE
2	REVISED PER DCN20132	SBW	10/15/13
1	RELEASED PER DCN18747	SBW	7/29/13

THE DESIGN AND DIMENSIONS OF THE PRODUCT SHOWN ON THIS DRAWING ARE SUBJECT TO CHANGE WITHOUT NOTICE

TITLE
MOUNTING ACCESSORIES FOR AHP1600WRP HARSH SENSOR

TOLERANCES UNLESS OTHERWISE SPECIFIED
.XX = ± .01
.XXX = ± .005
ANGLES = ± 2°

WIRING DEVICE-KELLEMS
HUBBELL INCORPORATED
SHELTON, CT.

DR. BY	SBW	APP. BY	
TR. BY		SCALE	1/2
CHK'D BY	SM	DATE	7/19/2013

DIMENSION SHEET FOR CAT. NO. SEE FIELD

REPAIRABLE ☐ NON-REPAIRABLE ☒

B

M-12178

2