THIS DRAWING IS UNPUBLISHED. RELEASED FOR PUBLICATION MAR , 2017.
© COPYRIGHT 2017 By TE Connectivity ALL RIGHTS RESERVED.

REVISIONS					
P	LTR	DESCRIPTION	DATE	DWN	APVD
	A	NEW DRAWING	21MAR2017	GK	DB

LABEL AND LINER DESIGN

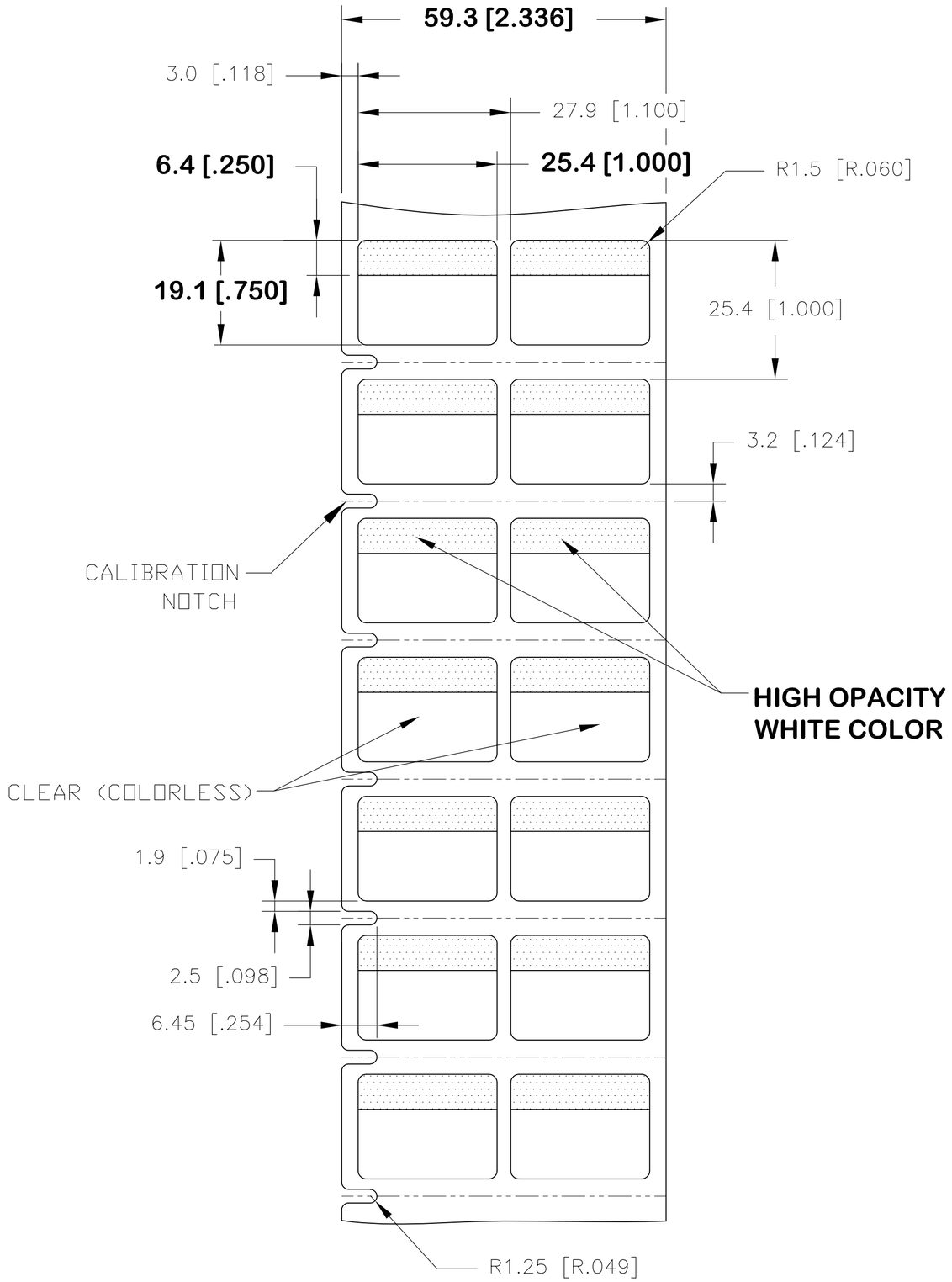

PRESENTATION

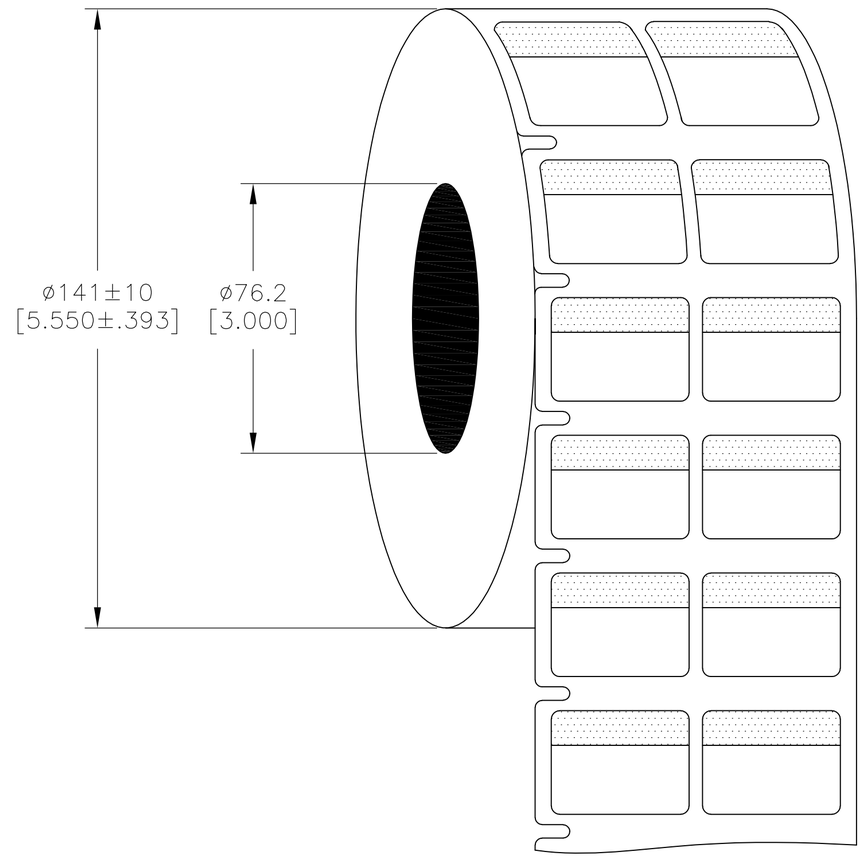

OUTSIDE WOUND
LABEL ACROSS: 2
PER ROLL QTY: 5000

All dimensions in mm [Inch]

UL RECOGNIZED BY UNDERWRITERS LABORATORIES INC.
IN UL FILE MH61871-PGIS2 CATEGORY-SBP LABEL, PRINTER AND RIBBON

TE PN: CN9919-000

MATERIAL	CLEAR VINYL
ADHESIVE TYPE	ACRYLIC PERMANENT
LINEAR	WHITE GLASSINE

TOLERANCES mm [INCH]	
LABEL HEIGHT:	±0.3 [.012]
LABEL WIDTH:	±0.3 [.012]
WEB WIDTH:	±0.8 [.031]
VERTICAL REPEAT:	±0.8 [.031]*
HORIZONTAL REPEAT:	±0.8 [.031]*
PRINT POSITIONING:	±0.8 [.031]*
LEFT MARGIN:	±0.4 [.016]
QUANTITY:	−0 % +2 %
*NON ACCUMULATING	

THIS DRAWING IS A CONTROLLED DOCUMENT.

DIMENSIONS: mm [INCHES]

TOLERANCES UNLESS OTHERWISE SPECIFIED:
0 PLC ± –
1 PLC ± –
2 PLC ± –
3 PLC ± –
4 PLC ± –
ANGLES ± –

MATERIAL: SEE TABLE
FINISH: GLOSSY

DWN 21MAR2017 GOPALAKRISHNA HV
CHK 21MAR2017 D.BURGAT
APVD 21MAR2017 D.BURGAT
PRODUCT SPEC TTDS-211 REV. B OR GREATER
APPLICATION SPEC —
WEIGHT 0.067g

TE Connectivity

NAME: SBP LABEL – WHITE
25.4 x 19.1mm [1.00 x 0.75inch]
–

SIZE	CAGE CODE	DRAWING NO	RESTRICTED TO
A2	00779	SBP100075WE5	—

CUSTOMER DRAWING | SCALE NTS | SHEET 1 OF 1 | REV A

CN9919-000