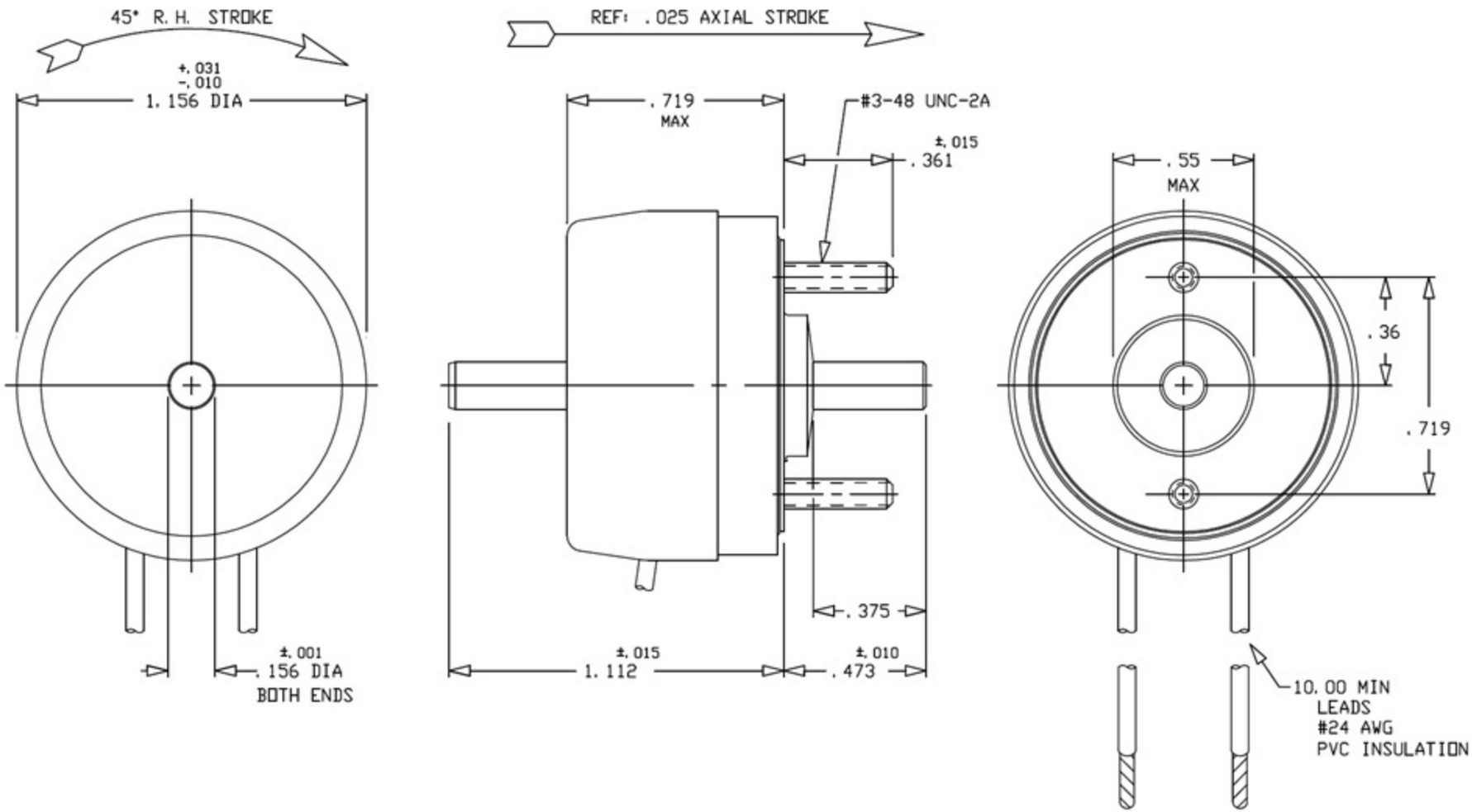

UNLESS OTHERWISE SPECIFIED
ALL DIMENSIONS IN: ☐ METRIC (mm) ☒ INCHES ☐ mm/INCHES
METRIC: X.X ± 0.3 mm, X.XX ± 0.13 mm
DECIMAL: .XX ± .010 IN, .XXX ± .005 IN
ANGLES: ±
ES-612 & ES-613 APPLIES
THIRD ANGLE PROJECTION

Saia Burgess LLC
801 Scholz Dr.
Vandalia, OH 45377

TITLE: SOLENOID - ROTARY

CODE IDENT: 81840

DRWG. NO.: H-1344-XXX

A

SCALE: NONE

SHEET 1 OF 1