A
board drillings

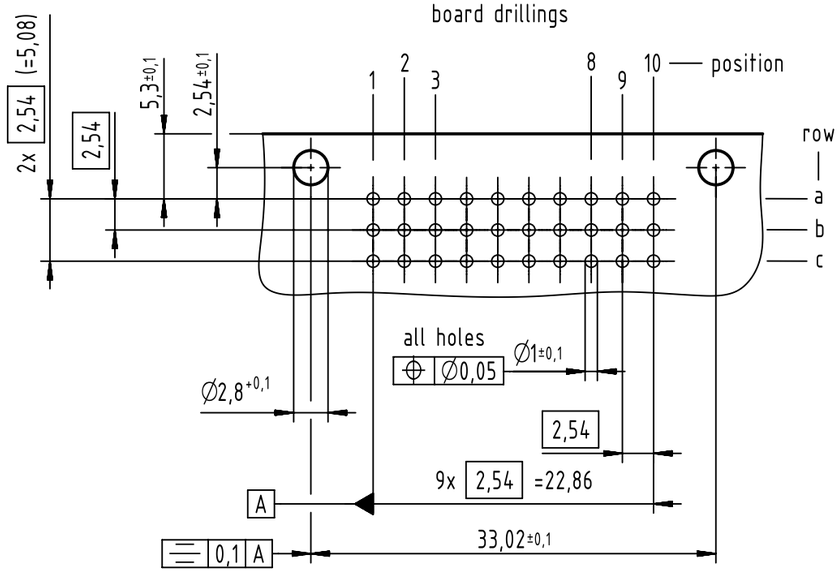

B
contact arrangement

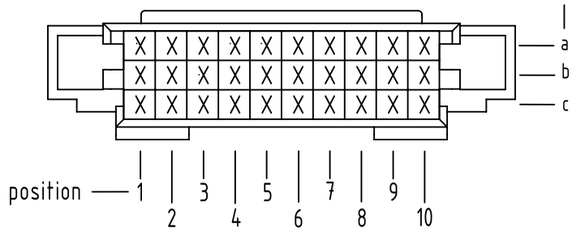

30 signal contacts

X = position with contact

☐ = position without contact

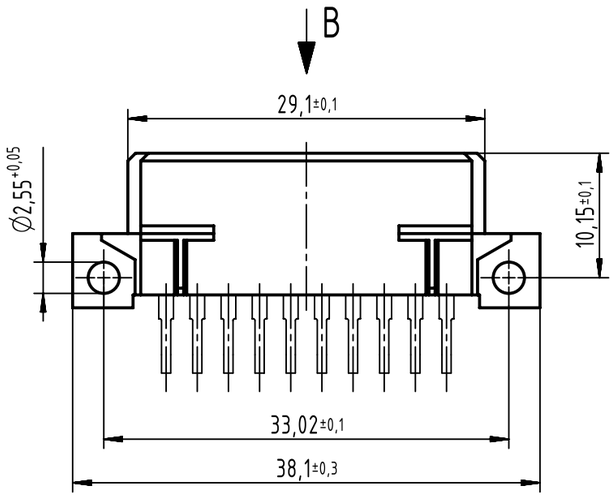

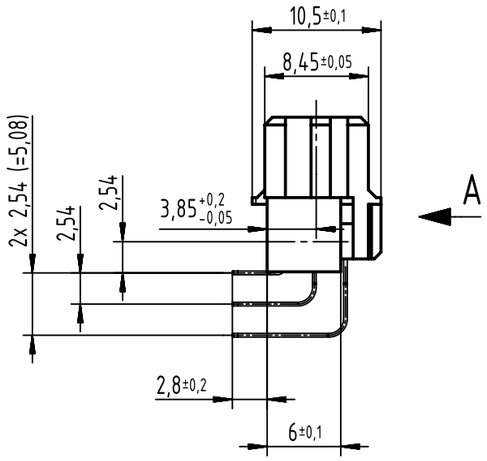

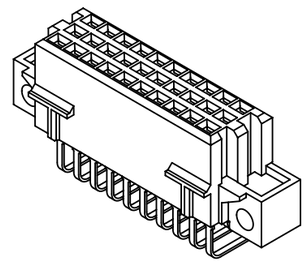

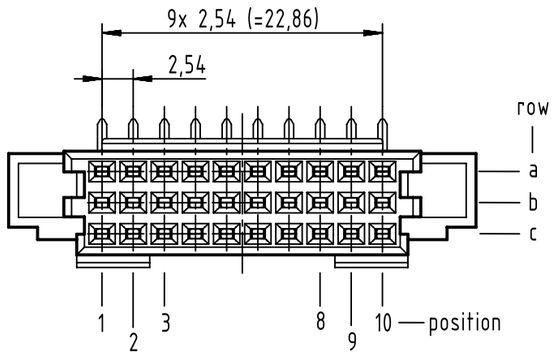

(1) further information see: DS 09732230201

09 29 230 6804	2
09 29 230 2804	1
part no.	performance level (1)

All Dimensions in mm Original Size DIN A3	Scale 2:1	Free size tol. complementary IEC 60603-2		Ref. Sub.	
All rights reserved Department EC PD - DE	Created by HASELOH	Inspected by WOLF	Standardisation HOFFMANN	Date 2016-10-17	State Final Release
HARTING Electronics GmbH D-32339 Espelkamp	Title DIN Signal type 3R female SMC 30-pole				Doc-Key / ECM-Nr. 100613548/UGD/036/A 500000110183
	Type TB	Number 0929230X804		Rev. A	Page 1/1

A3