Alle Rechte vorbehalten/ *All rights reserved*

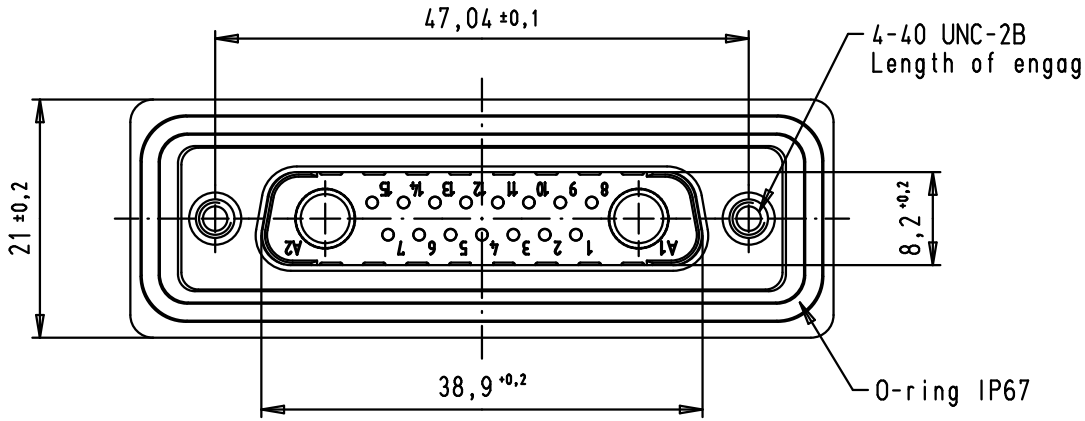

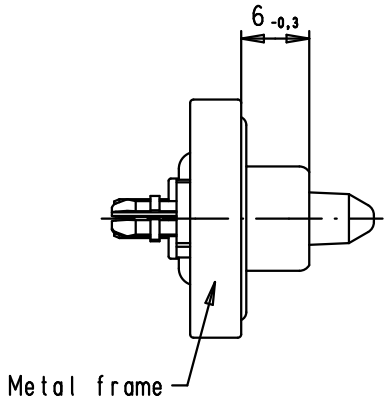

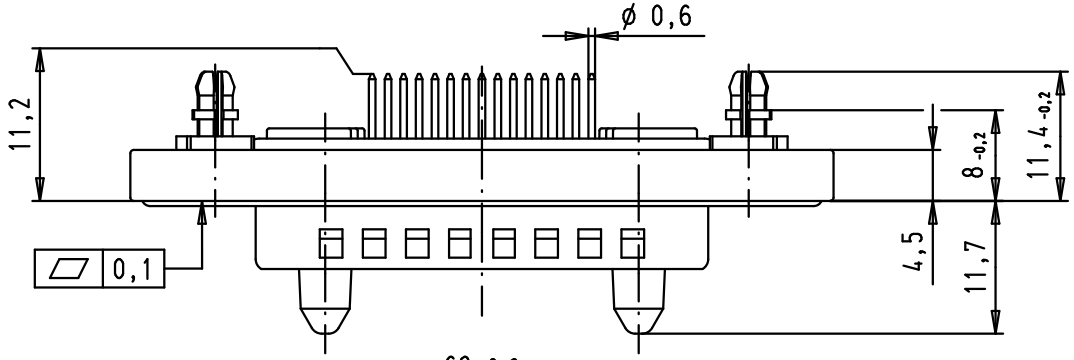

PCB layout, component side, thickness 1,6 mm

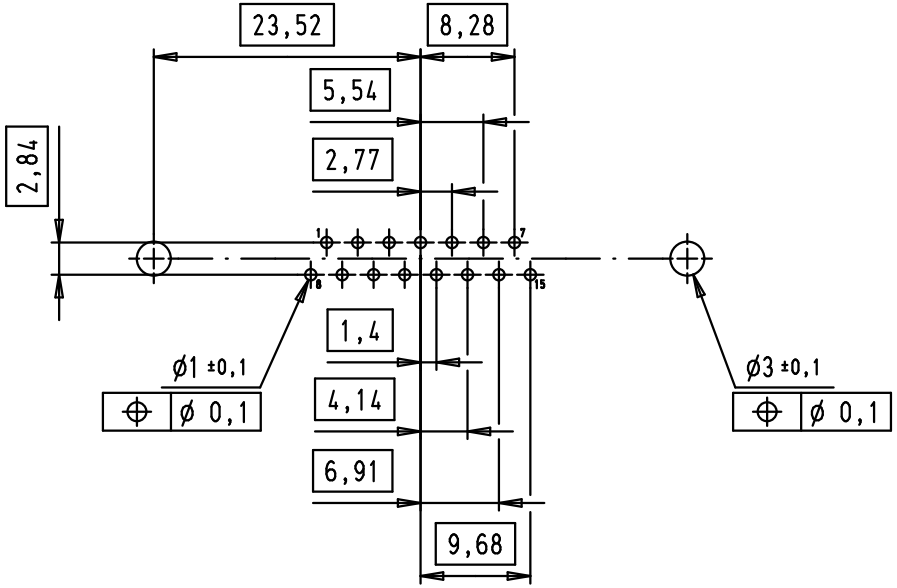

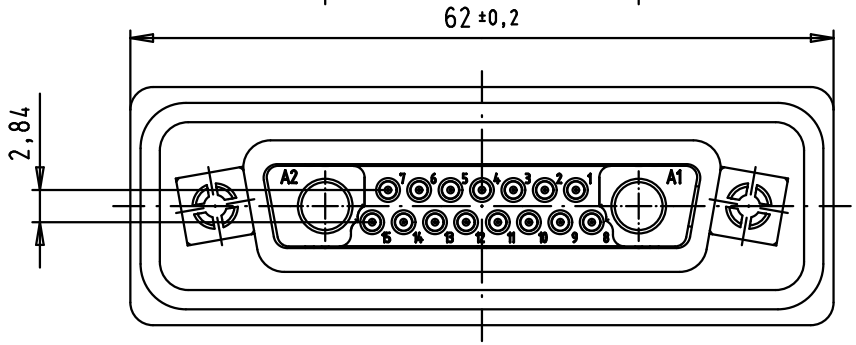

09 69 390 9014	0,76 µm Au
Part number	Performance level

				Dat.	Name
			Detail.	17/04/09	PK
			Insp.		
			Stand.		
EC00329	17/04/09	PK			
Mod.	Dat.	Name			

All Dim. in mm
Orig. Size DIN A 4

D-Sub, 17W2, male, straight, solder pins, rear metal frame, tin plated shell with dimples, guiding pins and board locks, O-ring, waterproof IP67

Maßstab/ *Scale* 1,5:1

HARTING EURL
F-95972 Paris

TB 09 69 390 9014

Sub.

Blatt/ *Page* 1/1

Released / Freigegeben 2009/06/30-07:14:02 UTC