Pan Screw Torx

DT000134
DT000135 DT000136

Specification

Material : Steel
Finish : TC1 - Commercial Zinc/Clear Trivalent

Diagram

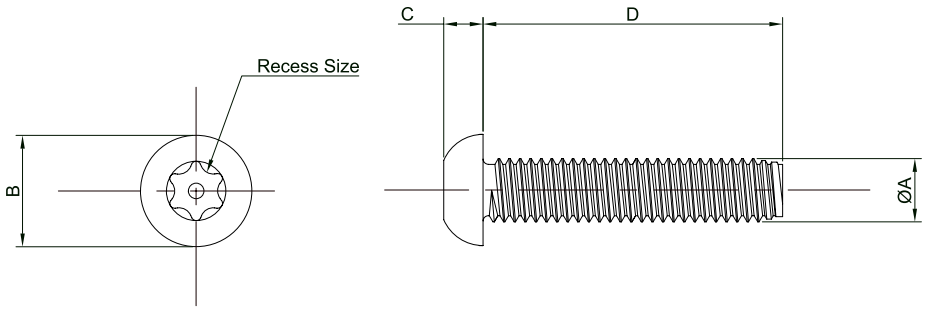

Dimension Table

Part Number	ØA	B Nom	C Max.	D Length	Recess Size
DT000134	M4-0.7	7.4mm	2.1mm	12mm	T20
DT000135				20mm	
DT000136	M6-1.0	10.4mm	3.2mm	12mm	T30

Part Number Table

Description	Part Number
Machine Screw, M4, Steel, 12mm, Zinc, Recessed Head Monodrive	DT000134
Machine Screw, M4, Steel, 20mm, Zinc, Recessed Head Monodrive	DT000135
Machine Screw, M6, Steel, 12mm, Zinc, Recessed Head Monodrive	DT000136

Important Notice : This data sheet and its contents (the "Information") belong to the members of the Premier Farnell group of companies (the "Group") or are licensed to it. No licence is granted for the use of it other than for information purposes in connection with the products to which it relates. No licence of any intellectual property rights is granted. The Information is subject to change without notice and replaces all data sheets previously supplied. The Information supplied is believed to be accurate but the Group assumes no responsibility for its accuracy or completeness, any error in or omission from it or for any use made of it. Users of this data sheet should check for themselves the Information and the suitability of the products for their purpose and not make any assumptions based on information included or omitted. Liability for loss or damage resulting from any reliance on the Information or use of it (including liability resulting from negligence or where the Group was aware of the possibility of such loss or damage arising) is excluded. This will not operate to limit or restrict the Group's liability for death or personal injury resulting from its negligence. DURATOOL is the registered trademark of the Group. © Premier Farnell Limited 2016.