REV.	LOCAS.	DESCRIPTION	DATE	DRAWN
01	NEW	INTNAL RELEASE	2011.03.23	馮代勇

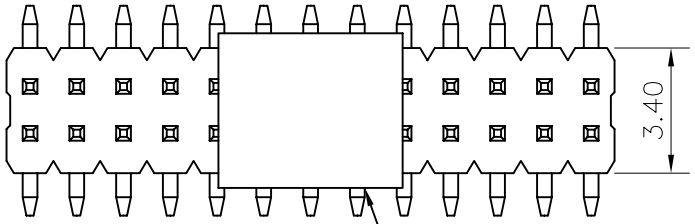

The cap used above 4pins

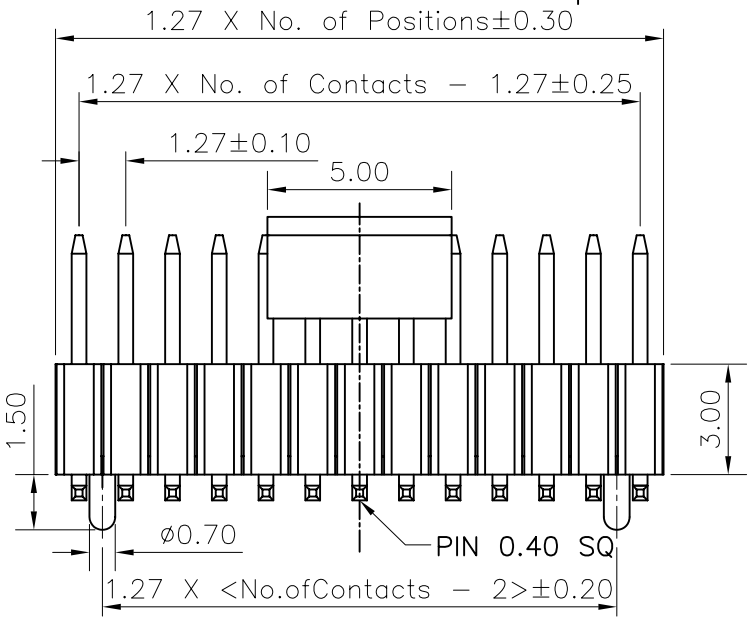

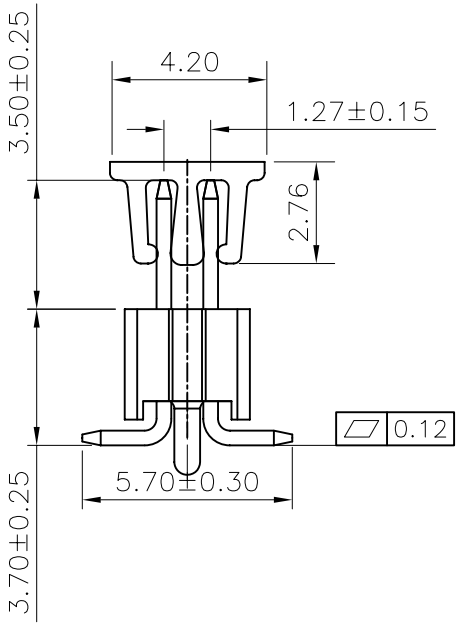

Specifications
Current Rating:1Amp
Insulation Resistance:1000MΩMin.
Dielectric Withstanding: 300VAC
Contact Resistance:20mΩMax.
Operating Temperature:−40°C to +105°C
Materials
Contact Material: Brass
Insulator Material:High Temperature Thermoplastic, UL 94V−0 LCP or the equivalent material

All materials must meet Greenconn requirement for environment protection.

RECOMMENDED P.C.B LAYOUT
(Tolerance:±0.05)

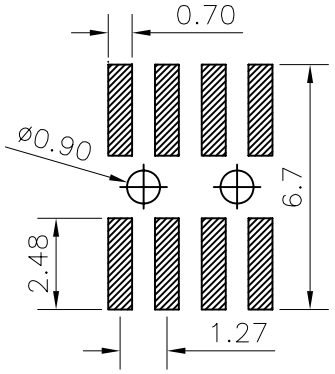

Ordering Information

G PEC214 - XX XX B009 C 1 B X

- XX: No. of Pins per Row 02~50
- XX: Standard Plating 02=Gold Flash; Selective plating 01=Tin, 05=Gold Flash/Tin
- 1: Color 1=Black
- X: Standard Packing E=Cap+Tube; Selective Packing D=Tape&Reel

格 稜 股 份 有 限 公 司
Greenconn Corporation

REV.	UNIT.	SCALE.	PAGE.
01	mm	1:1	1/1

GENERAL TOLERANCE	
X.°±5.0°	X.±0.30
.X°±3.0°	.X±0.25
.XX°±2.0°	.XX±0.15
.XXX°±1.0°	.XXX±0.10

DESIGN:	馮代勇	DATE: 2011.03.23
CHECKED:	李景沖	DATE: 2011.03.23
AUDITED:	李新華	DATE: 2011.03.23
APPROVED:	Lear	DATE: 2011.03.23

DWG. NO. GPEC214−CB9CB

PART NO. GPEC214−XXXXB009C1BX

TITLE. 1.27 PIN HEADER DUAL ROWS SMT TYPE BASE 3.00H