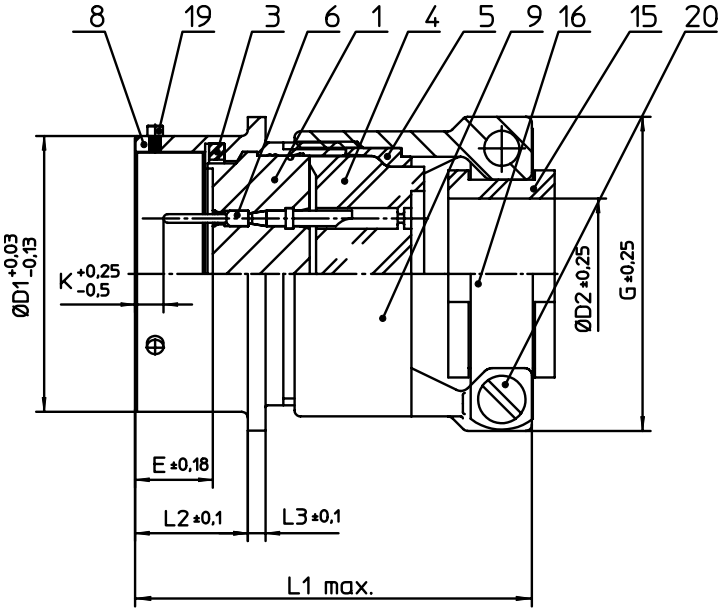

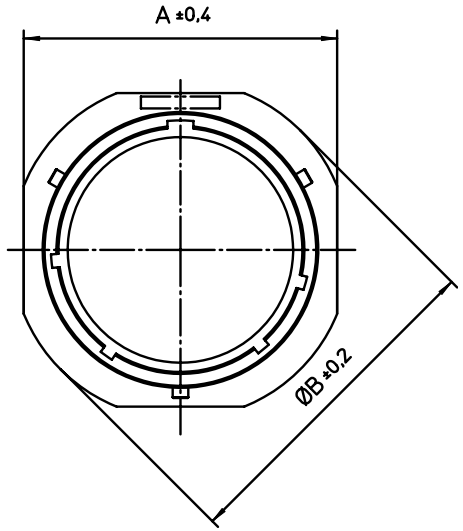

NO.	MASSE / DIMENSIO
A	33.3
B	36.5
D1	28.58
D2	15.9
E	8.25
G	35
K	2.16
L1	56
L2	11.6
L3	1.9

NO.	BESCHREIBUNG / DESCRIPTION
1	ISOLIERKÖRPER STIFT / INSULATOR PIN
3	DICHTRING / GASKET
4	DICHTKÖRPER / GROMMET
5	ENDRING / ENDRING
6	KONTAKT STIFT / CONTACT PIN
8	GEHÄUSE / RECEPTACLE
9	ENDGEHÄUSE / ENDBELL
15	KABELTÜLLE / BUSHING
16	KABELKLEMME / CABLE CLAMP
19	BAYONETTSTIFT / BAYONET PIN
20	ZYLINDER-SCHRAUBE / CYLINDER HEAD SCREW

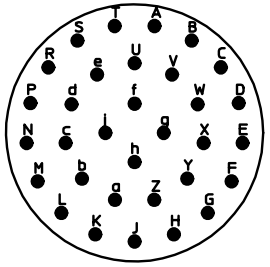

Note: Due to an automatic nomenclature system, numbers generated may not be sequential.

Specification and Dimensions subject to chang
Drawings illustrate normal insulator positioning

Material Specification:	
Shell Material:	Aluminium alloy
Shell Plating:	Olive drab chromate over cadmium plating
Insulator Material:	Polychloroprene
Contact Material:	Copper alloy
Contact Plating:	gold plated

all dimensions are in mm
Dimensions without tolerance indications are general tolerances in acc. with DIN7168m

drawing for
CUSTOMER

ITT
Engineered for life
ITT CANNON GmbH
D - 71384 Weinstadt/Germany

description MS3111F18-32P
Cable connecting plug
Grommet seal with strain relief
Solder Cup / Pin / Layout: 18-32

© All rights reserved. Reproduction or issue to third in any form whatever is only permitted with written authorization of ITT Cannon

page 1/1

revision 1573 20. Dec 17