THIS DRAWING IS UNPUBLISHED. RELEASED FOR PUBLICATION -,- .
© COPYRIGHT – By – ALL RIGHTS RESERVED.

REVISIONS					
P	LTR	DESCRIPTION	DATE	DWN	APVD
	H4	PART STATUS UPDATED IN PARTS LIST TABLE	01FEB2018	SD	PS

NOTES:

1. TRUE POSITION TOLERANCE OF POST TIPS APPLIES WHEN HEADERS ARE HELD FLAT AGAINST PRINTED CIRCUIT BOARD.

△2 OBSOLETE PART NUMBER

△3 .000100–.000200 BRIGHT TIN OVER .000050–.000100 NICKEL.

△4 .000100–.000200 BRIGHT TIN–LEAD OVER .000050–.000100 NICKEL.

△5 PRELIMINARY PART

△6 .000100–.000200 MATTE TIN OVER .000050 NICKEL.

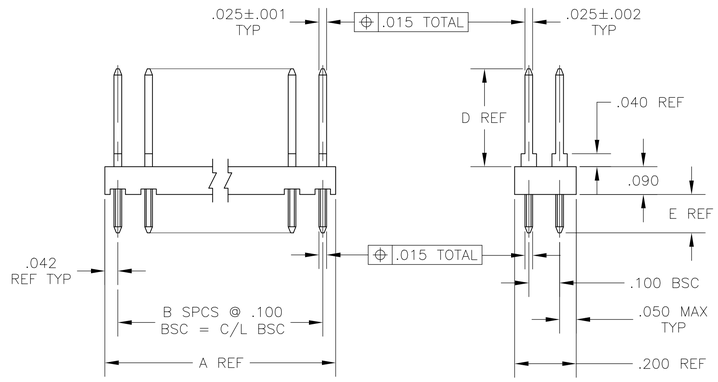

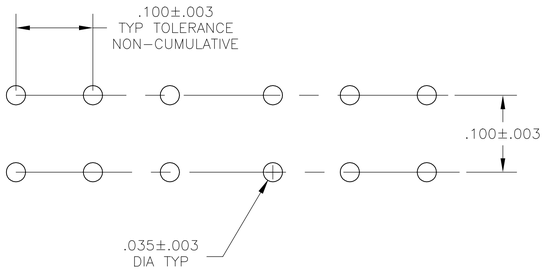

RECOMMENDED HOLE LAYOUT

SEE SHEET 2 FOR
LEAD FREE PART NUMBERS

△5 △2	△3	.125	.318	.500	5	.584	12	4–87543–3
△2	△4	.125	.318	4.100	41	4.184	80	4–87543–2
△2	△4	.125	.318	4.000	40	4.084	80	4–87543–1
	△4	.125	.318	3.900	39	3.984	80	4–87543–0
		.125	.318	3.800	38	3.884	78	3–87543–9
		.125	.318	3.700	37	3.784	76	3–87543–8
		.125	.318	3.600	36	3.684	74	3–87543–7
		.125	.318	3.500	35	3.584	72	3–87543–6
		.125	.318	3.400	34	3.484	70	3–87543–5
		.125	.318	3.300	33	3.384	68	3–87543–4
		.125	.318	3.200	32	3.284	66	3–87543–3
		.125	.318	3.100	31	3.184	64	3–87543–2
		.125	.318	3.000	30	3.084	62	3–87543–1
		.125	.318	2.900	29	2.984	60	3–87543–0
		.125	.318	2.800	28	2.884	58	2–87543–9
		.125	.318	2.700	27	2.784	56	2–87543–8
		.125	.318	2.600	26	2.684	54	2–87543–7
		.125	.318	2.500	25	2.584	52	2–87543–6
		.125	.318	2.400	24	2.484	50	2–87543–5
		.125	.318	2.300	23	2.384	48	2–87543–4
		.125	.318	2.200	22	2.284	46	2–87543–3
		.125	.318	2.100	21	2.184	44	2–87543–2
		.125	.318	2.000	20	2.084	42	2–87543–1
△2		.125	.318	1.900	19	1.984	40	2–87543–0
		.125	.318	1.800	18	1.884	38	1–87543–9
		.125	.318	1.700	17	1.784	36	1–87543–8
		.125	.318	1.600	16	1.684	34	1–87543–7
		.125	.318	1.500	15	1.584	32	1–87543–6
		.125	.318	1.400	14	1.484	30	1–87543–5
		.125	.318	1.300	13	1.384	28	1–87543–4
		.125	.318	1.200	12	1.284	26	1–87543–3
		.125	.318	1.100	11	1.184	24	1–87543–2
		.125	.318	1.000	10	1.084	22	1–87543–1
		.125	.318	.900	9	.984	20	1–87543–0
		.125	.318	.800	8	.884	18	87543–9
		.125	.318	.700	7	.784	16	87543–8
		.125	.318	.600	6	.684	14	87543–7
		.125	.318	.500	5	.584	12	87543–6
		.125	.318	.400	4	.484	10	87543–5
		.125	.318	.300	3	.384	8	87543–4
		.125	.318	.200	2	.284	6	87543–3
		.125	.318	.100	1	.184	4	87543–2
	△4	.125	.318	–	–	.084	2	87543–1
	FINISH	E	D	C	B	A	NO OF POSN	PART NUMBER

THIS DRAWING IS A CONTROLLED DOCUMENT.

DIMENSIONS: INCHES

TOLERANCES UNLESS OTHERWISE SPECIFIED:
0 PLC ± –
1 PLC ± –
2 PLC ± –
3 PLC ± .005
4 PLC ± –
ANGLES ± –

MATERIAL: HSG–GLASS FILLED NYLON, COLOR: BLACK, CONTACT–PHOS BRONZE

FINISH: SEE TABLE

DWN M.E.PASTEL 20 NOV 87
CHK T.C. CLARK 20 NOV 87
APVD T.C. CLARK 20 NOV 87

PRODUCT SPEC —
APPLICATION SPEC —
WEIGHT —

TE Connectivity Ltd.

NAME: ASSEMBLY, MOD II, HEADER, DOUBLE ROW, .100X.100

SIZE A1 | CAGE CODE 00779 | DRAWING NO C–87543 | RESTRICTED TO —

CUSTOMER DRAWING | SCALE 4:1 | SHEET 1 OF 2 | REV H4

THIS DRAWING IS UNPUBLISHED. RELEASED FOR PUBLICATION -,- .
© COPYRIGHT - By - ALL RIGHTS RESERVED.

REVISIONS

P	LTR	DESCRIPTION	DATE	DWN	APVD
	-	SEE SHEET 1	-	-	-

6	.125	.318	3.900	39	3.984	80	9-87543-0
	.125	.318	3.800	38	3.884	78	8-87543-9
	.125	.318	3.700	37	3.784	76	8-87543-8
	.125	.318	3.600	36	3.684	74	8-87543-7
	.125	.318	3.500	35	3.584	72	8-87543-6
	.125	.318	3.400	34	3.484	70	8-87543-5
	.125	.318	3.300	33	3.384	68	8-87543-4
	.125	.318	3.200	32	3.284	66	8-87543-3
	.125	.318	3.100	31	3.184	64	8-87543-2
	.125	.318	3.000	30	3.084	62	8-87543-1
	.125	.318	2.900	29	2.984	60	8-87543-0
	.125	.318	2.800	28	2.884	58	7-87543-9
	.125	.318	2.700	27	2.784	56	7-87543-8
	.125	.318	2.600	26	2.684	54	7-87543-7
	.125	.318	2.500	25	2.584	52	7-87543-6
	.125	.318	2.400	24	2.484	50	7-87543-5
	.125	.318	2.300	23	2.384	48	7-87543-4
	.125	.318	2.200	22	2.284	46	7-87543-3
	.125	.318	2.100	21	2.184	44	7-87543-2
	.125	.318	2.000	20	2.084	42	7-87543-1
	.125	.318	1.900	19	1.984	40	7-87543-0
	.125	.318	1.800	18	1.884	38	6-87543-9
	.125	.318	1.700	17	1.784	36	6-87543-8
	.125	.318	1.600	16	1.684	34	6-87543-7
	.125	.318	1.500	15	1.584	32	6-87543-6
	.125	.318	1.400	14	1.484	30	6-87543-5
	.125	.318	1.300	13	1.384	28	6-87543-4
	.125	.318	1.200	12	1.284	26	6-87543-3
	.125	.318	1.100	11	1.184	24	6-87543-2
	.125	.318	1.000	10	1.084	22	6-87543-1
	.125	.318	.900	9	.984	20	6-87543-0
	.125	.318	.800	8	.884	18	5-87543-9
	.125	.318	.700	7	.784	16	5-87543-8
	.125	.318	.600	6	.684	14	5-87543-7
	.125	.318	.500	5	.584	12	5-87543-6
	.125	.318	.400	4	.484	10	5-87543-5
	.125	.318	.300	3	.384	8	5-87543-4
	.125	.318	.200	2	.284	6	5-87543-3
	.125	.318	.100	1	.184	4	5-87543-2
6	.125	.318	-	-	.084	2	5-87543-1
FINISH	E	D	C	B	A	NO OF POSN	PART NUMBER

THIS DRAWING IS A CONTROLLED DOCUMENT.

DIMENSIONS: INCHES

TOLERANCES UNLESS OTHERWISE SPECIFIED:
0 PLC ± -
1 PLC ± -
2 PLC ± -
3 PLC ± -
4 PLC ± -
ANGLES ± -

MATERIAL: HSG-GLASS FILLED NYLON COLOR: BLACK CONTACT-PHOS BRONZE

FINISH: SEE TABLE

DWN M.E.PASTEL 20 NOV 87
CHK T.C. CLARK 20 NOV 87
APVD T.C. CLARK 20 NOV 87
PRODUCT SPEC —
APPLICATION SPEC —
WEIGHT —

TE Connectivity Ltd.

NAME: ASSEMBLY, MOD II, HEADER, DOUBLE ROW, .100X.100

SIZE A1 | CAGE CODE 00779 | DRAWING NO C-87543 | RESTRICTED TO —

CUSTOMER DRAWING | SCALE 4:1 | SHEET 2 OF 2 | REV H4

4805 (1/15)