THIS DRAWING IS UNPUBLISHED. RELEASED FOR PUBLICATION 20
© COPYRIGHT 20 BY - ALL RIGHTS RESERVED.

REVISIONS

P	LTR	DESCRIPTION	DATE	DWN	APVD
	D1	New pn added for 9 and 10 pos.	27JAN2015	PS	JK

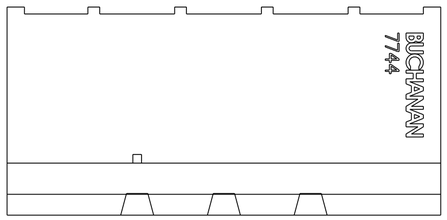

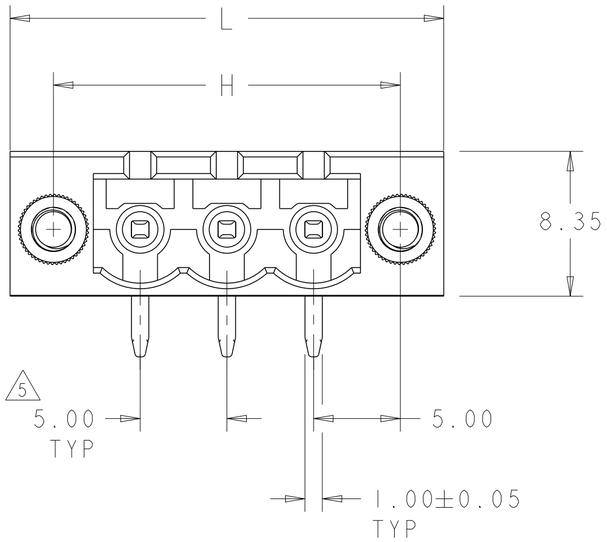

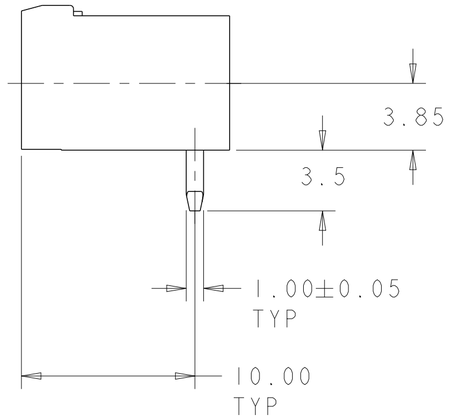

NOTES:

1. MATERIALS AND FINISH:
   HOUSING: PA 6-6, UL 94-V0, COLOR: GREEN.
   TERMINAL: PHOSPHOR BRONZE, TIN PLATED.
2. SUITABLE FOR 1.6 TO 2.4mm PC BOARD THICKNESS.
3. RECOGNIZED UNDER THE COMPONENT PROGRAM OF UNDERWRITERS LABORATORIES INC. FILE No. E60677.
4. IMQ CERTIFICATE WITH SURVEILLANCE ON CONFORMITY WITH IEC 998-1/998-2-1.
5. NOT CUMULATIVE TOLERANCE.
6. LOGO SIZE AND LOCATION APPROXIMATELY AS SHOWN.
7. OPERATING TEMPERATURE RANGE -40°C TO +110°C
8. ELECTRICAL
   WIRE RANGE : 30 - 12 AWG
   MAX. VOLTAGE : 300 V
   MAX CURRENT : 15 A
   CONTACT RESISTANCE : <15 m Ohm
   INSULATION RESISTANCE : > 1000 M Ohm (500V DC)

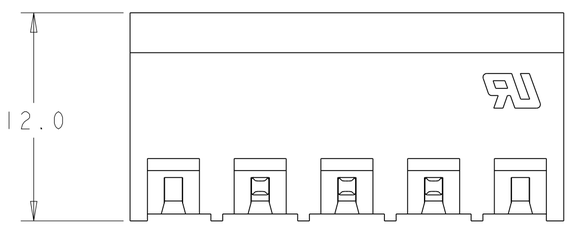

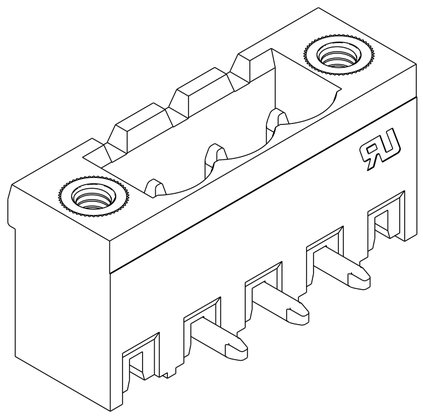

796864-3 AS SHOWN

L	H	NO. OF POSN	PART NUMBER
60.0	55.0	10	1-796864-0
55.0	50.0	9	796864-9
50.0	45.0	8	796864-8
45.0	40.0	7	796864-7
40.0	35.0	6	796864-6
35.0	30.0	5	796864-5
30.0	25.0	4	796864-4
25.0	20.0	3	796864-3
20.0	15.0	2	796864-2

RECOMMENDED PC BOARD LAYOUT

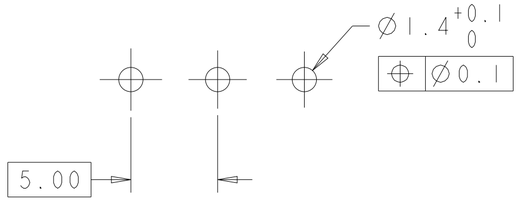

THIS DRAWING IS A CONTROLLED DOCUMENT.

DIMENSIONS: mm

TOLERANCES UNLESS OTHERWISE SPECIFIED:
0 PLC ±-
1 PLC ±0.2
2 PLC ±0.15
3 PLC ±
4 PLC ±
ANGLES ±2°

MATERIAL 1

FINISH 1

DWN S.WELDON 09FEB2001
CHK D.BIEVENOUR 09FEB2001
APVD D.BIEVENOUR 09FEB2001
PRODUCT SPEC -
APPLICATION SPEC -
WEIGHT -

TE Connectivity

NAME TERMINAL BLOCK HEADER ,90 DEG, WITH LOCKING SCREW FLANGE, PITCH 5.0mm

SIZE A2 | CAGE CODE 00779 | DRAWING NO C-796864 | RESTRICTED TO -

Customer Drawing | SCALE 4:1 | SHEET 1 OF 1 | REV D1

1471-9 (3/13)