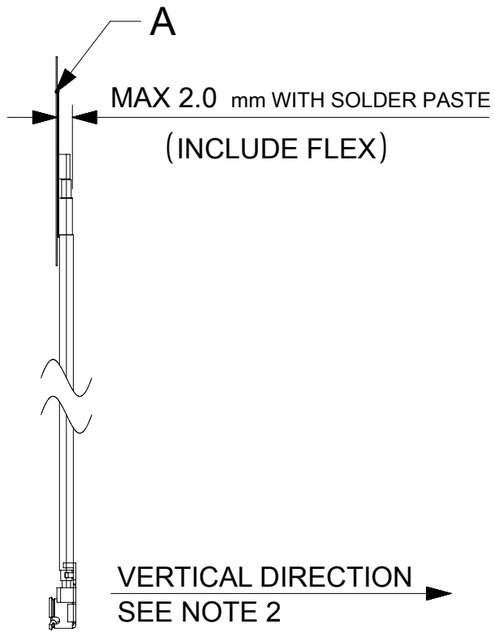

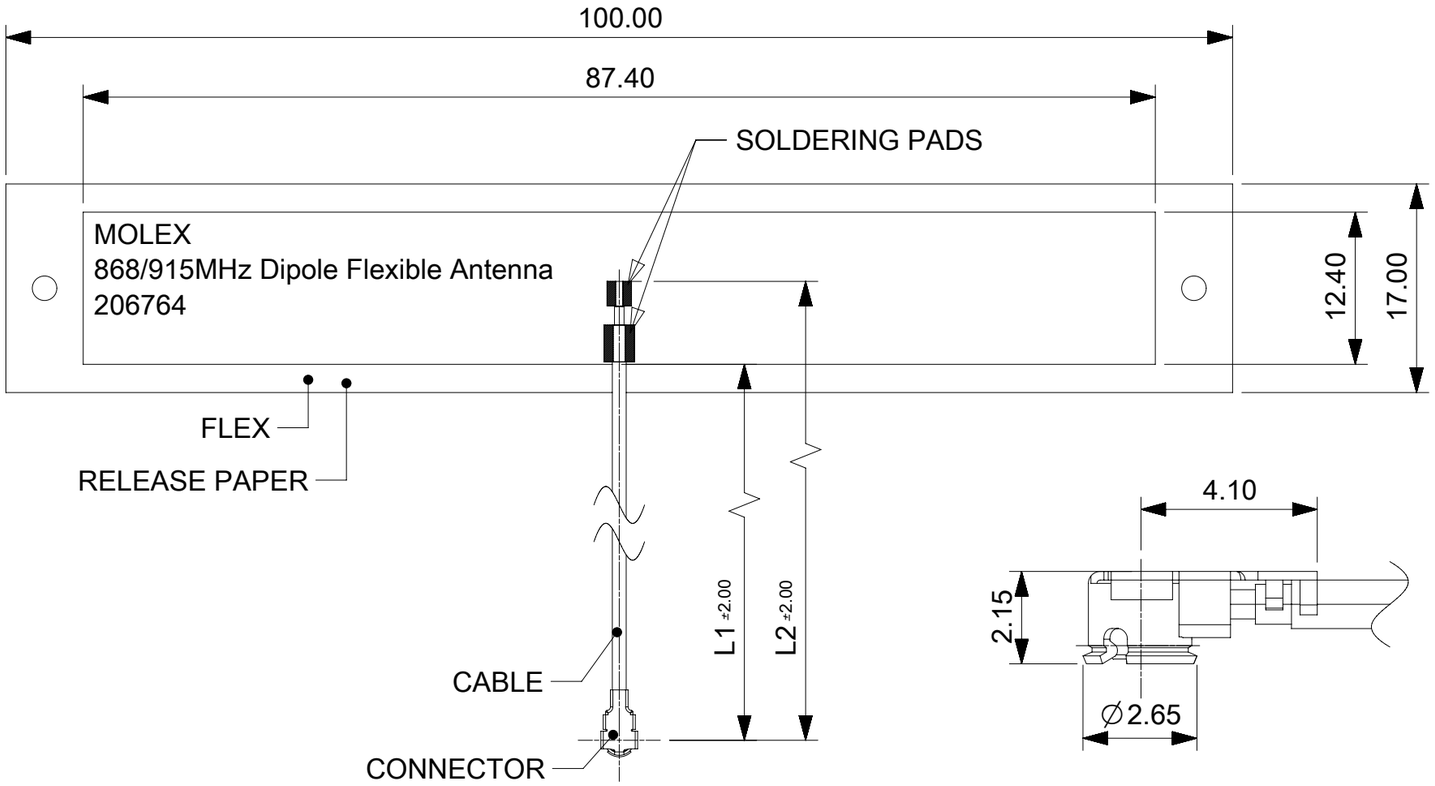

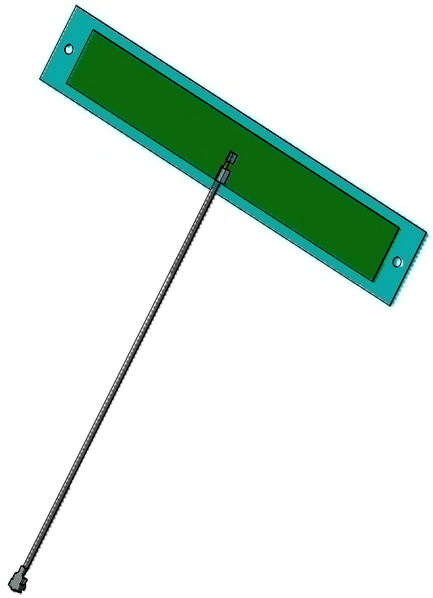

3D VIEW

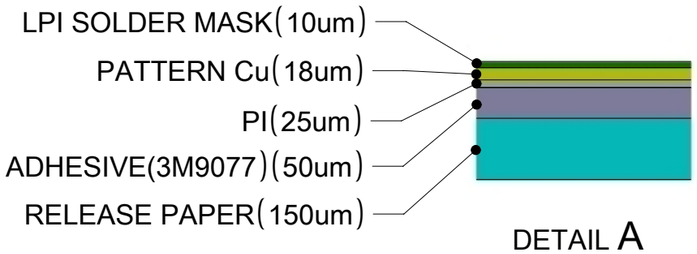

DETAIL A
SCALE 100:1

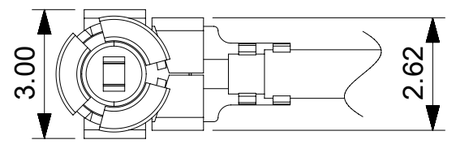

U.FL CONNECTOR

NOTES:
1. MATERIAL: FLEX
   CABLE:∅1.13 mm
   CONNECTOR:OD1.13,2.5H U.FL CONNECTOR(GOLD PLATED)
2. FOR PULL TEST, CAN NOT LIFT UP IN THE VERTICAL DIRECTION.
3. SOLDER MASK:BLACK.
4. APPLICATION SPEC PLEASE REFER TO AS OF 2067640100
5. PRODUCT SPEC PLEASE REFER TO PS OF 2067640100
6. PACKAGING DRAWING PLEASE REFER TO PK OF 2067640100

ITEM	MATERIAL NO.	CABLE LENGTH"L1"	CABLE LENGTH"L2"
1	2067640050	43.3mm	50mm
2	2067640100	93.3mm	100mm
3	2067640150	143.3mm	150mm
4	2067640200	193.3mm	200mm
5	2067640250	243.3mm	250mm
6	2067640300	293.3mm	300mm

THIS DRAWING CONTAINS INFORMATION THAT IS PROPRIETARY TO MOLEX ELECTRONIC TECHNOLOGIES, LLC AND SHOULD NOT BE USED WITHOUT WRITTEN PERMISSION

SYMBOLS: E = 0; C = 0; B = 0; S = 0; ▼ = 0; C = 0; ☒ = 0; ■ = 0; V = 0

DIMENSION UNITS: mm
SCALE: 3:1

GENERAL TOLERANCES (UNLESS SPECIFIED)

ANGULAR TOL	±	0.5 °
4 PLACES	±	0.03
3 PLACES	±	0.05
2 PLACES	±	0.15
1 PLACE	±	0.2
0 PLACES	±	0.5

DRAFT WHERE APPLICABLE MUST REMAIN WITHIN DIMENSIONS

CURRENT REV DESC:

EC NO: 171476
DRWN: KCHENG06 2018/02/06
CHK'D: KCHENG06 2018/02/12
APPR: XJSONG 2018/02/23

INITIAL REVISION:
DRWN: KCHENG06 2018/02/06
APPR: XJSONG 2018/02/23

THIRD ANGLE PROJECTION | DRAWING: A3-SIZE | SERIES: 206764

molex

868/915MHZ DIPOLE FLEXIBLE ANTENNA

PRODUCT CUSTOMER DRAWING

DOCUMENT NUMBER	DOC TYPE	DOC PART	REVISION
2067640100	PSD	SD	A

MATERIAL NUMBER	CUSTOMER	SHEET NUMBER
SEE TABLE	GENERAL MARKET	1 OF 1

DOCUMENT STATUS	P1	RELEASE DATE	2018/02/23 01:30:14

FORMAT: molex_tb_tmpl_A3
REVISION: H
DATE: 2018/01/18