MICRO SWITCH
a Honeywell Division
FED. MFG. CODE 91929

SWITCH – BASIC

CATALOG LISTING
1DM437

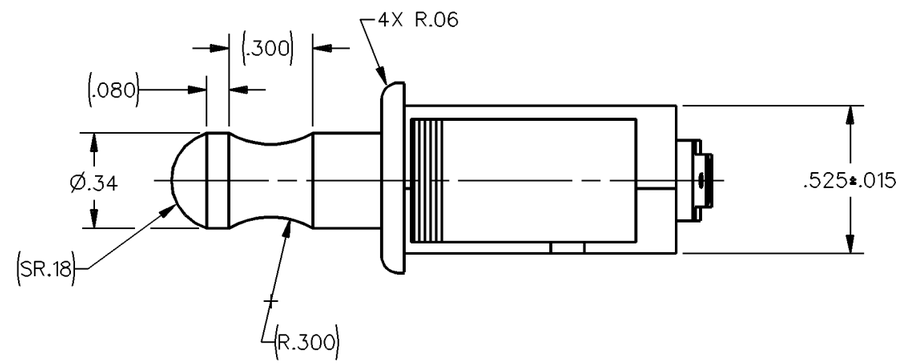

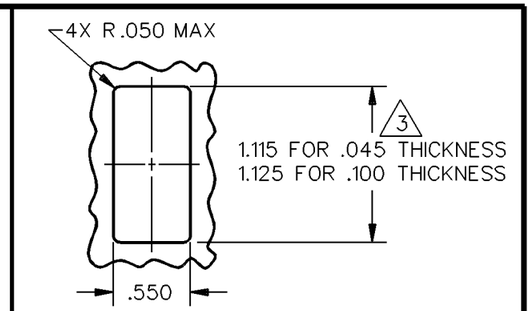

PANEL HOLE DETAIL
SCALE FULL

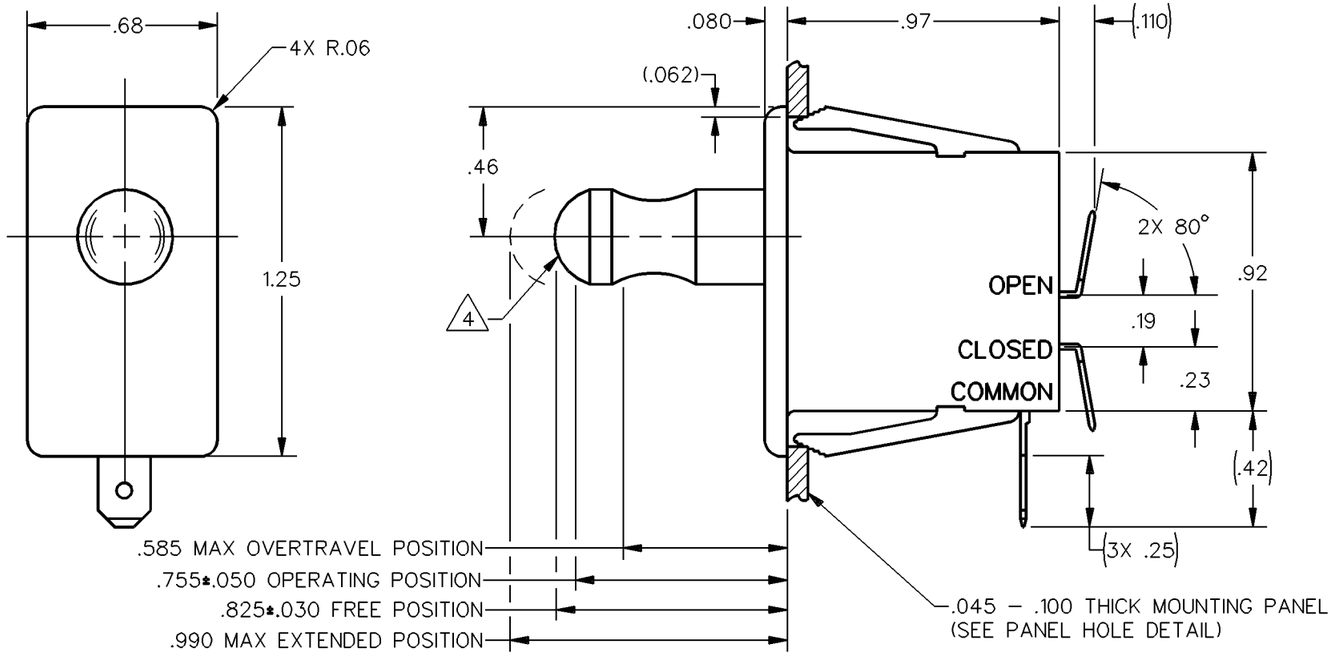

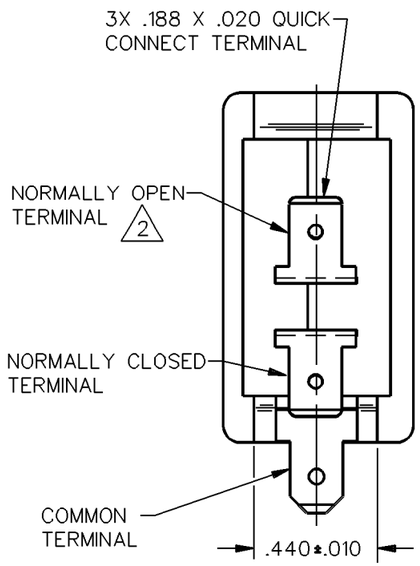

THIS DRAWING COVERS A PROPRIETARY ITEM AND IS THE PROPERTY OF MICRO SWITCH, A DIVISION OF HONEYWELL. THIS DRAWING IS NOT TO BE COPIED OR USED WITHOUT THE APPROVAL OF MICRO SWITCH

THIRD ANGLE PROJECTION

SCALE 2 TO 1

DO NOT SCALE PRINT

CHARACTERISTICS

OPERATING FORCE – – – – – 15 OZ MAX

ELECTRICAL DATA

CONTACT ARRANGEMENT
S P D T

L22
1A 125 VAC

UNLESS OTHERWISE SPECIFIED TOLERANCES ARE

ONE PLACE	(.0)	±.030
TWO PLACE	(.00)	±.015
THREE PLACE	(.000)	±.005
ANGLES		± 5°

WEIGHT

NOTES
1 – BLACK PLASTIC CASE AND BLACK PLUNGER
2 FLAG STYLE QUICK CONNECT RECEPTACLE REQUIRED FOR NORMALLY OPEN TERMINAL IF SWITCH IS WIRED BEFORE MOUNTING
3 NOMINAL CUTOUT DIMENSION FOR PANELS BETWEEN .045 AND .100 SHOULD BE INTERPOLATED BETWEEN 1.115 AND 1.125
4 PUSH TO OPERATE – MOMENTARY, PULL TO OPERATE – MAINTAINED
5 – SWITCH HAS GOLD ALLOY CONTACTS

ANSI Y14.5M–1982 APPLIES

CATALOG LISTING 1DM437
ISSUE M 9
RELEASE NO. PR–12856
REPLACES
REVISIONS
A CO–72328 JWB 6 JAN 93
CHECK
CHECK
CHECK
DRAWN J W B 6 JAN 93
DDM/CAD