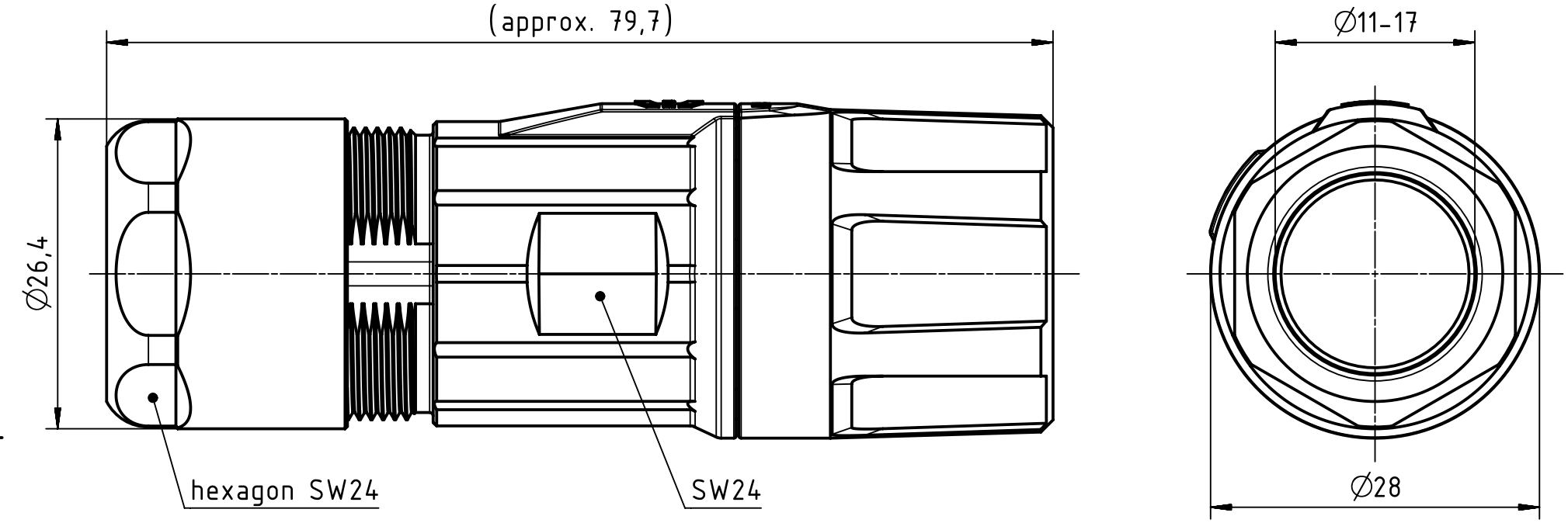


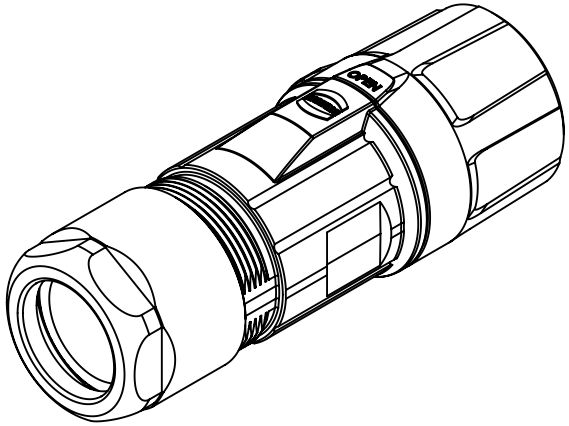

| | | | | | |
|---|---|---|---|---|---|
| All Dimensions in mm<br>Original Size DIN A4 | Scale<br>2:1 | Free size tol. | | Ref.<br>Sub. | |
| All rights reserved<br>Department EL PD - DE | Created by<br>HELLMANN | Inspected by<br>RIEPE | Standardisation<br>TIEMANNA | Date<br>2017-09-12 | State<br>Final Release |
| HARTING Electric GmbH & Co. KG<br>D-32339 Espelkamp | Title<br>Han M23 P ComLock-S Hood 11-17 mm | | | | Doc-Key / ECM-Nr.<br>100735655/UGD/000/A<br>500000124813 |
| | Type<br>TB | Number<br>09 15 600 0483 | | Rev.<br>A | Page<br>1/1 |

A4