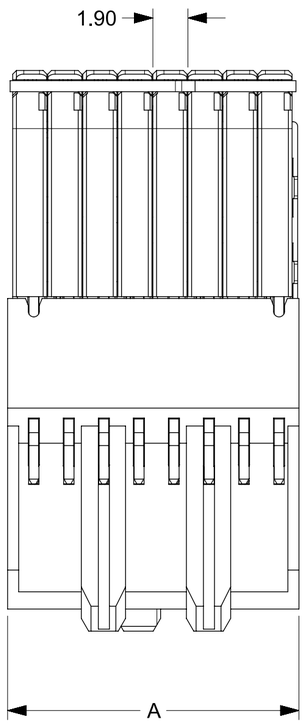

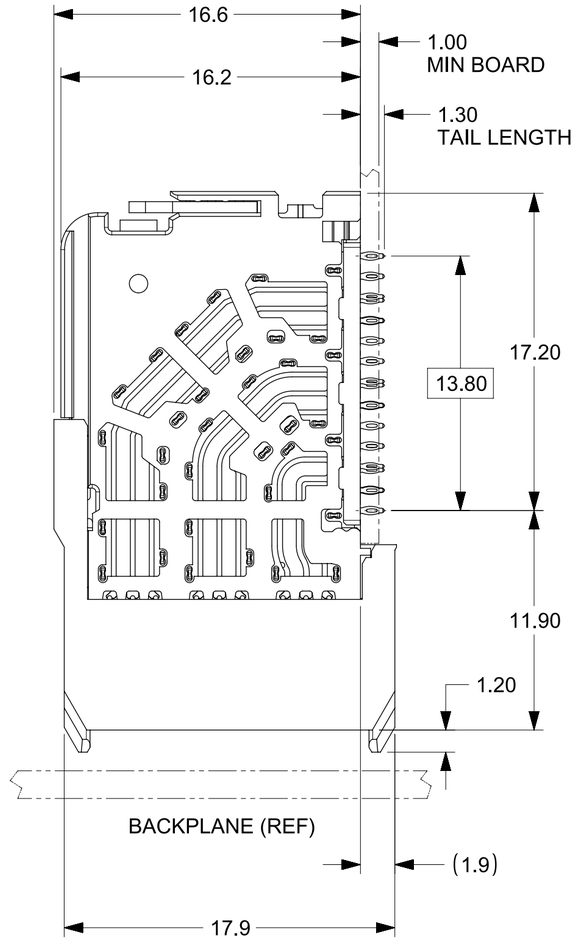

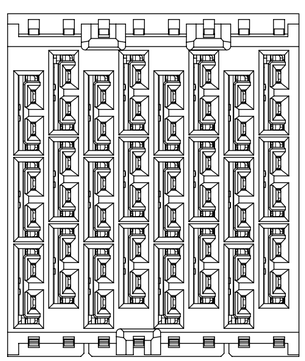

NOTES:

1. MATERIALS: HOUSING - LIQUID CRYSTAL POLYMER (LCP)
   GLASS-FILLED, UL94V-0
   TERMINALS - HIGH PERFORMANCE COPPER ALLOY
2. FINISH: 30uIN GOLD IN CONTACT AREA.
   SELECTIVE TIN ON PCB TAILS.
   NICKEL OVERALL.
3. REFER TO MOLEX PRODUCT SPECIFICATION PS-171320-999 FOR PERFORMANCE SPECIFICATIONS.
4. THIS PART CONFORMS TO CLASS B REQUIREMENTS OF MOLEX COSMETIC SPEC PS-45499-002.
5. PRODUCT WILL BE PACKAGED PER PK-78888-083.
6. SEE SHEET 2 FOR HOLE PATTERN DIMENSIONS.
7. MATES WITH IMPEL BP SERIES NUMBER 171335.
8. REFER TO IMPEL PCB ROUTING GUIDE AS-172730-990 FOR ANTIPAD, ROUTING RECOMMENDATIONS, AND ADDITIONAL PCB INFORMATION.
9. WHEN STACKING MODULES END TO END, THE MINIMUM COLUMN TO COLUMN HOLE SPACING IS 2.65mm.

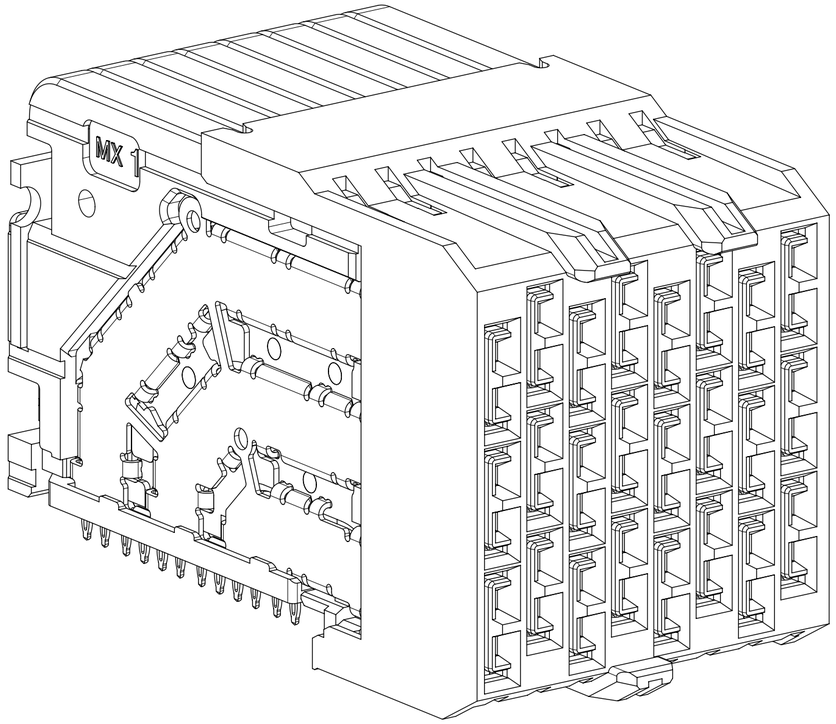

THIS DRAWING CONTAINS INFORMATION THAT IS PROPRIETARY TO MOLEX ELECTRONIC TECHNOLOGIES, LLC AND SHOULD NOT BE USED WITHOUT WRITTEN PERMISSION

REVISED TABLE
EC NO: 118297 2016/05/09
DRWN: VNANDAM 2017/06/19
CHK'D: YLLIM 2017/06/22
APPR: DWLEE01

GENERAL TOLERANCES (UNLESS SPECIFIED)
ANGULAR TOL ± 0.5 °

4 PLACES	±	
3 PLACES	±	
2 PLACES	±	0.13
1 PLACE	±	0.25
0 PLACES	±	

DRAFT WHERE APPLICABLE MUST REMAIN WITHIN DIMENSIONS

REV A1

DIMENSION UNITS	mm
SCALE	4:1
DRWN BY	JLAURX
DATE	2014/11/10
CHK'D BY	BKOSTIC
DATE	2016/02/02
APPR BY	TELO
DATE	2016/02/24
DRAWING SIZE	C
THIRD ANGLE PROJECTION	

molex®

IMPEL PLUS DAUGHTERCARD
3 PAIR - 1.9MM PITCH UNGUIDED SALES DRAWING

PRODUCT CUSTOMER DRAWING

SERIES	MATERIAL NUMBER	CUSTOMER
172730	SEE CHART	GENERAL MARKET

DOCUMENT NUMBER	DOC TYPE	DOC PART	SHEET NUMBER
SD-172730-0001	PSD	000	1 OF 2

RELEASE STATUS		RELEASE DATE	

FORMAT: master-db-prod-C
REVISION: G
DATE: 2015/12/14

MATERIAL NUMBER	NUMBER OF COLUMNS	NUMBER OF DIFF PAIR	DIM 'A'	DIM 'B'
172730-1138	8	24	15.95 MAX	13.30

172730-11**

MODULE TYPE
1 = UNGUIDED

COLUMN SIZE
20 = 10 COLUMN
22 = 12 COLUMN
26 = 16 COLUMN
38 = 8 COLUMN

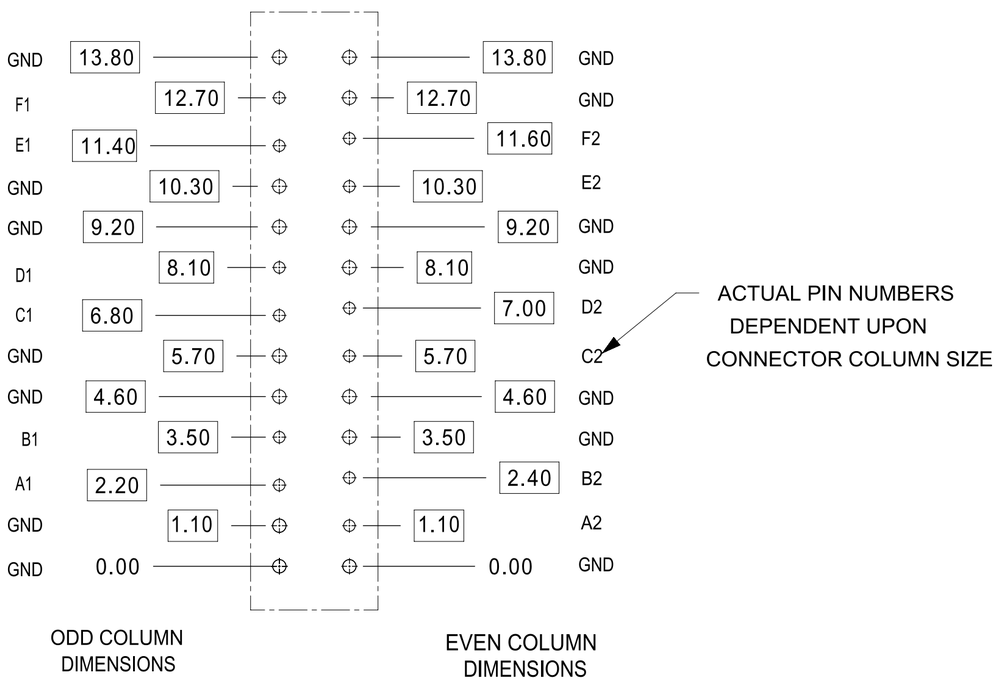

DETAIL 1
SCALE 8:1

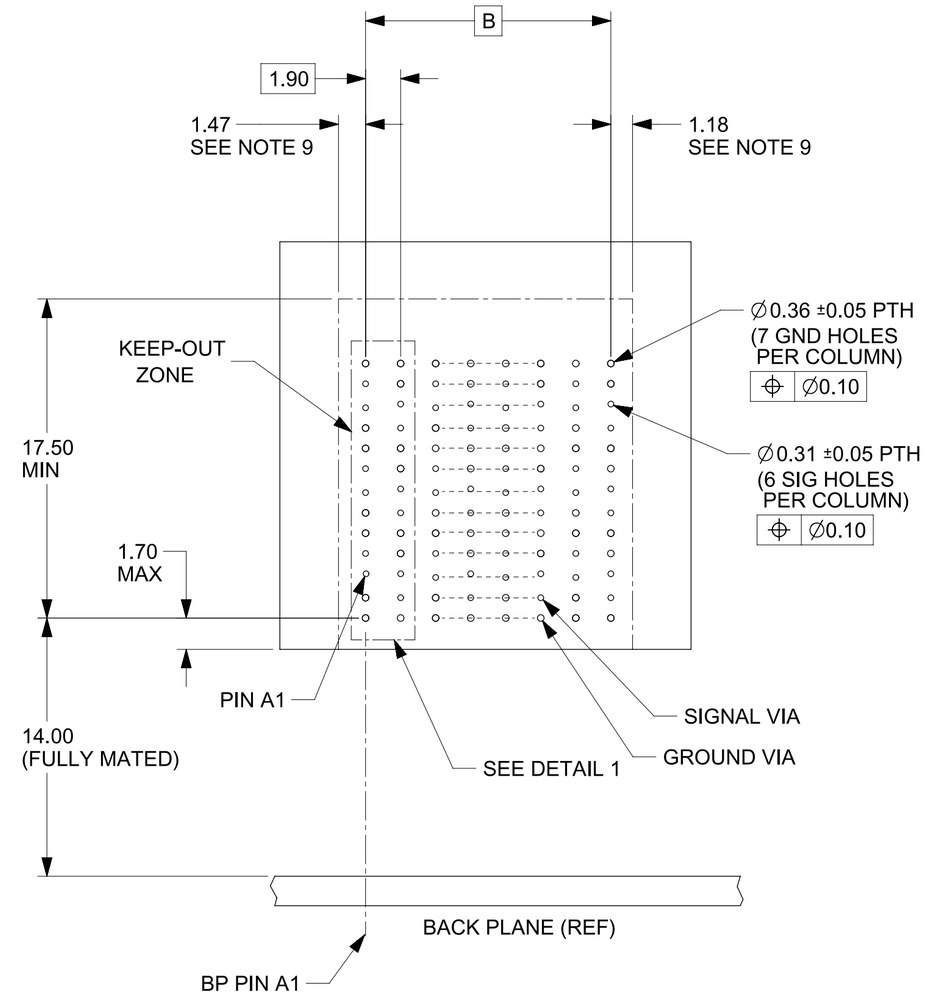

DAUGHTERCARD HOLE PATTERN
(CONNECTOR SIDE)

THIS DRAWING CONTAINS INFORMATION THAT IS PROPRIETARY TO MOLEX ELECTRONIC TECHNOLOGIES, LLC AND SHOULD NOT BE USED WITHOUT WRITTEN PERMISSION

REVISED TABLE
EC NO: 118297 2016/05/09
DRWN: VNANDAM 2017/06/19
CHK'D: YLLIM
APPR: DWLEE01 2017/06/22

GENERAL TOLERANCES (UNLESS SPECIFIED)
ANGULAR TOL ± 0.5 °
4 PLACES ±
3 PLACES ±
2 PLACES ± 0.13
1 PLACE ± 0.25
0 PLACES ±
DRAFT WHERE APPLICABLE MUST REMAIN WITHIN DIMENSIONS

DIMENSION UNITS: mm
SCALE: 4:1
DRWN BY: JLAURX DATE: 2014/11/10
CHK'D BY: BKOSTIC DATE: 2016/02/02
APPR BY: TELO DATE: 2016/02/24
DRAWING SIZE: C
THIRD ANGLE PROJECTION

molex®

IMPEL PLUS DAUGHTERCARD
3 PAIR - 1.9MM PITCH UNGUIDED SALES DRAWING

PRODUCT CUSTOMER DRAWING

SERIES	MATERIAL NUMBER	CUSTOMER
172730	SEE CHART	GENERAL MARKET

DOCUMENT NUMBER	DOC TYPE	DOC PART	SHEET NUMBER
SD-172730-0001	PSD	000	2 OF 2

A1 REV

RELEASE STATUS | RELEASE DATE

FORMAT: master-tb-portrait-C
REVISION: G
DATE: 2015/12/14