Oct.1.2018 Copyright 2018 HIROSE ELECTRIC CO., LTD. All Rights Reserved.
In case that the application demands a high level of reliability, such as automotive, please contact a company representative for further information.

HRS DRAWING FOR REFERENCE

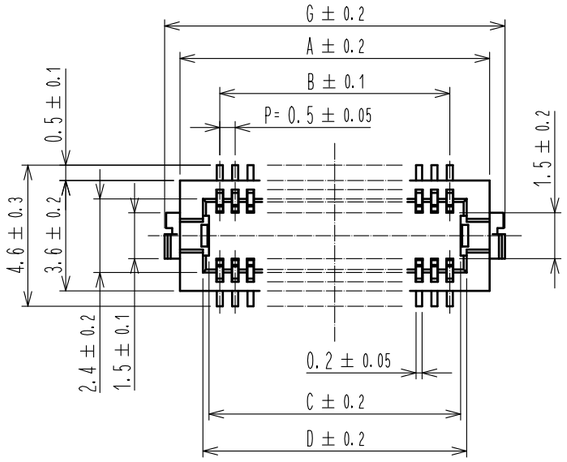

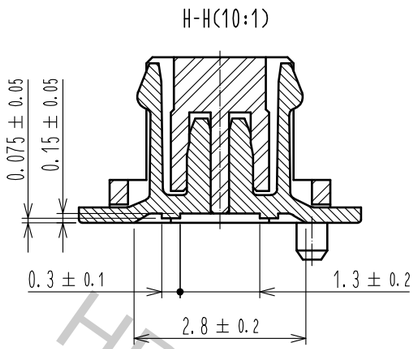

CODE No.	CONTACT	A	B	C	D	E	F	G
CL537-0003-6-86	20	7.1	4.5	5.2	5.6	6.6	5.3	8.1
CL537-0005-1-86	30	9.6	7.0	7.7	8.1	9.1	7.8	10.6
CL537-0012-7-86	32	10.1	7.5	8.2	8.6	9.6	8.3	11.1
CL537-0006-4-86	36	11.1	8.5	9.2	9.6	10.6	9.3	12.1
CL537-0007-7-86	40	12.1	9.5	10.2	10.6	11.6	10.3	13.1
CL537-0009-2-86	50	14.6	12.0	12.7	13.1	14.1	12.8	15.6
CL537-0011-4-86	60	17.1	14.5	15.2	15.6	16.6	15.3	18.1

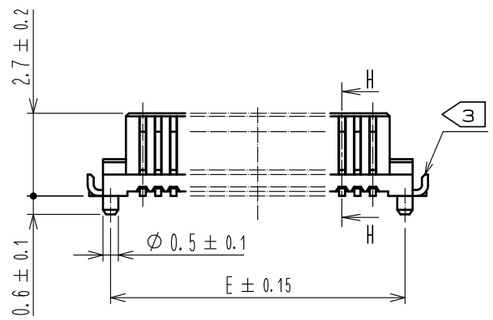

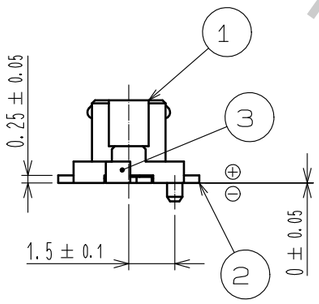

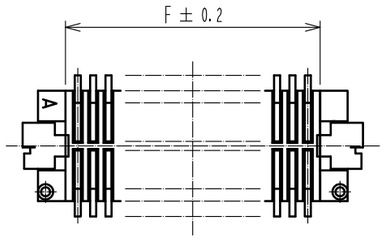

RECOMMEND METAL MASK PATTERN (10:1)

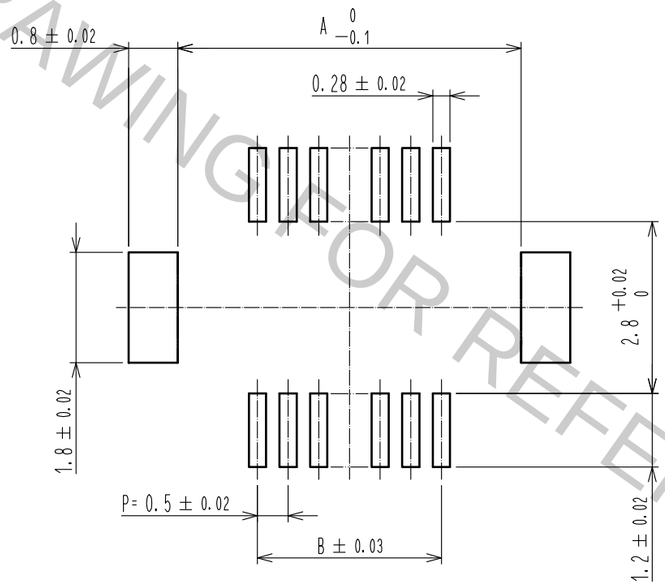

RECOMMENDED LAND PATTERN (10:1)

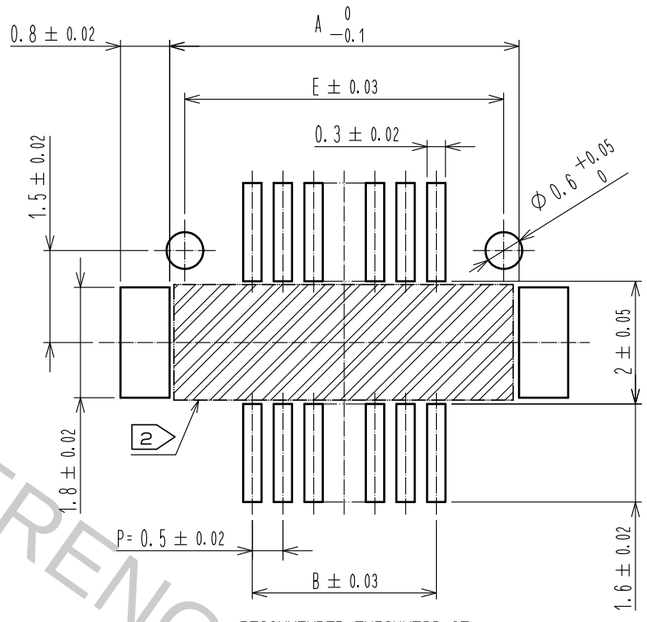

RECOMMENDED THICKNESS OF SOLDER PASTE : 120 μm

NOTES 1 LEAD CO-PLANARITY SHALL BE 0.08 mm MAX.
2 IF THERE IS PATTERN ON ▨ PART, THERE IS A POSSIBILITY THAT IT WILL MAKE CONTACT WITH THE LEADS.
3 REINFORCED METAL FITTINGS AS FOLLOWS.

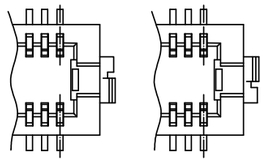

NO.	MATERIAL	FINISH . REMARKS
2	PHOSPHOR BRONZE	CONTACT AREA:GOLD PLATED 0.2μm min LEAD AREA:GOLD PLATED 0.015μm min OTHERS(UNDER PLATING):NICKEL PLATED 2μm min
1	POLYAMIDE	UL94V-0, NATURAL(BEIGE)

NO.	MATERIAL	FINISH . REMARKS
7	PS	CLEAR (REINFORCEMENT COLLAR)
6	PS	BLACK (PLASTIC REEL)
5	POLYESTER	CLEAR (COVER TAPE)
4	PS	CLEAR (EMBOSSED CARRIER TAPE)
3	BRASS	TIN PLATED 2μm min (UNDER PLATING):NICKEL 1μm min

UNITS	SCALE		COUNT	DESCRIPTION OF REVISIONS	DESIGNED	CHECKED	DATE
mm	5 : 1	△1	1	DIS-H-00001678	SH. HOSODA	TS. MIYAZAKI	16. 05. 30

HRS HIROSE ELECTRIC CO., LTD.

APPROVED	KH. IKEDA	13. 08. 06
CHECED	YH. MICHIDA	13. 08. 06
DESIGNED	YN. SAKAMOTO	13. 08. 05
DRAWN	KR. AJITO	13. 08. 05

DRAWING NO.	EDC3-162502-77
PART NO.	DF12-*DS-0.5V(86)
CODE NO.	CL537

△1 1/2

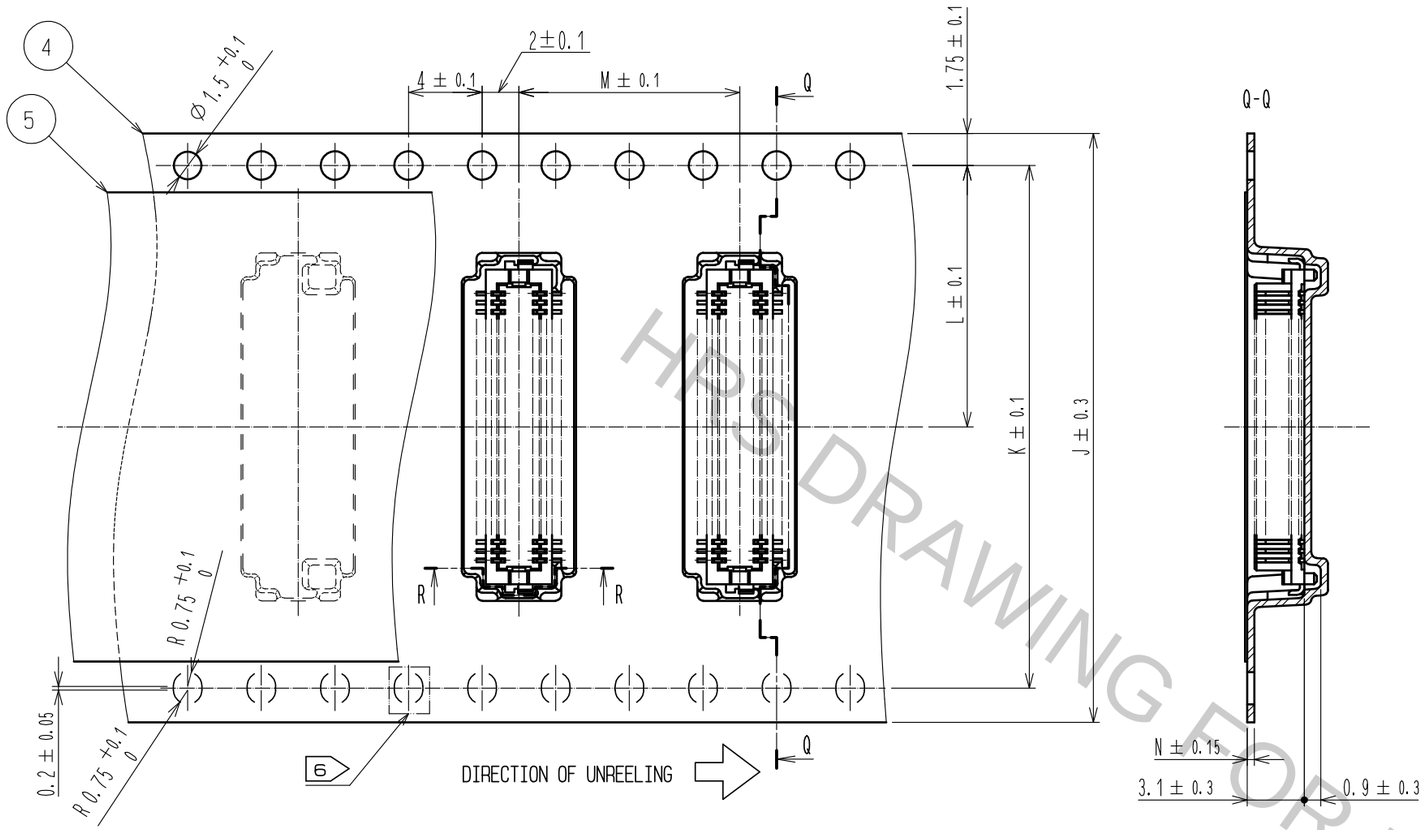

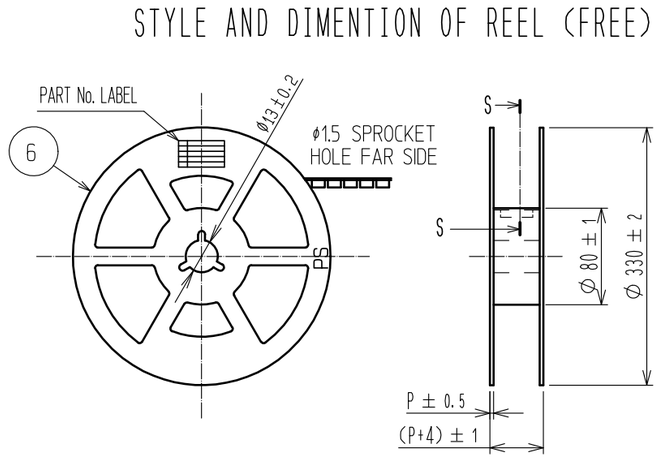

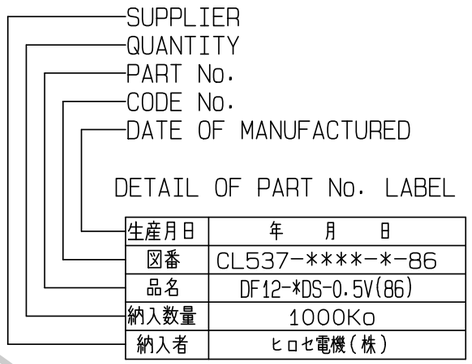

DETAIL OF PART No. LABEL

生産月日	年　月　日
図番	CL537-****-*-86
品名	DF12-*DS-0.5V(86)
納入数量	1000Ko
納入者	ヒロセ電機(株)

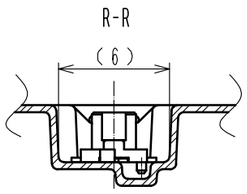

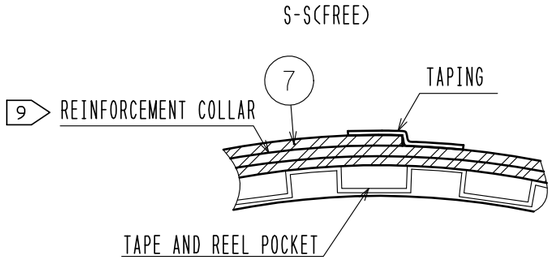

CODE No.	CONTACT	J	K	L	M	N	P
CL537-0003-6-86	20	16	–	7.5	12	0.38	17.5
CL537-0005-1-86	30	24	–	11.5	12	0.38	25.5
CL537-0012-7-86	32	24	–	11.5	12	0.30	25.5
CL537-0006-4-86	36	24	–	11.5	8	0.30	25.5
CL537-0007-7-86	40	24	–	11.5	12	0.38	25.5
CL537-0009-2-86	50	24	–	11.5	8	0.30	25.5
CL537-0011-4-86	60	32	28.4	14.2	12	0.38	35.5

NOTES 4　1 REEL 1000 CONNECTORS.
5　AT THE BEGINNING OF THE REEL, 30 COMPONENTS SHALL BE EMPTY.
AT THE END OF THE REEL, 20 COMPONENTS SHALL BE EMPTY.
6　WHEN THE TAPE WIDTH IS 32 mm OR 44 mm, SPROCKET HOLES SHALL BE SET ON BOTH SIDE OF REEL AS SHOWN ON THIS DRAWING.
7　PEEL FORCE REFERS TO JIS C 0806.(IEC 60286-3)
8　THE REEL IS PACKED WITH A POLYETHYLENE MATERIAL, TOGETHER WITH A DRYING AGENT.
9　AFTER PACKING, ROLL 2 METERS OF THE REINFORCEMENT COLLAR TO OUTER CIRCUMFERENCE OF TAPE AND REEL POCKET, AND TAPE DOWN AT THE END THE COLLAR.

HRS

DRAWING NO.	EDC3-162502-77
PART NO.	DF12-*DS-0.5V(86)
CODE NO.	CL537

1　2/2

HRS DRAWING FOR REFERENCE

Oct.1.2018 Copyright 2018 HIROSE ELECTRIC CO., LTD. All Rights Reserved.
In case that the application demands a high level of reliability, such as automotive, please contact a company representative for further information.