Oct.1.2018 Copyright 2018 HIROSE ELECTRIC CO., LTD. All Rights Reserved.
In case that the application demands a high level of reliability, such as automotive, please contact a company representative for further information.

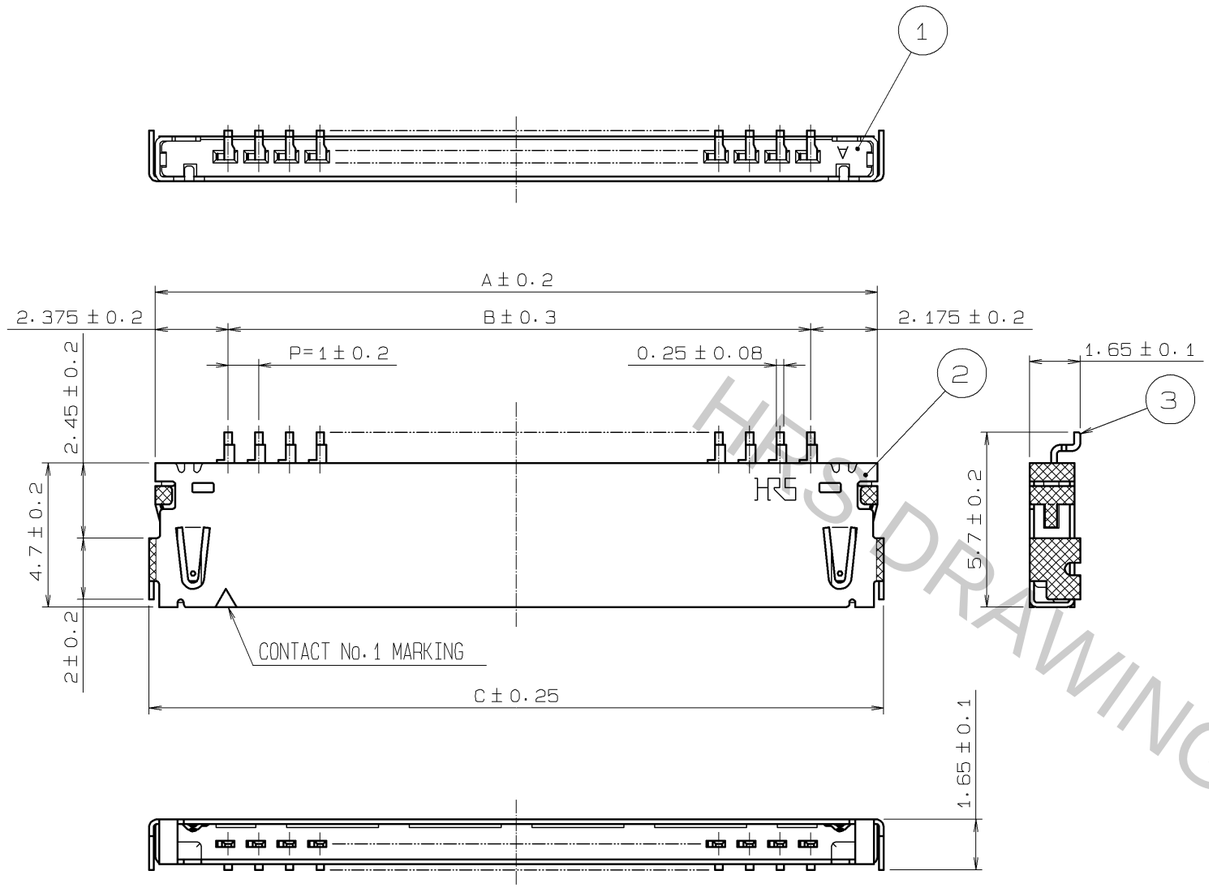

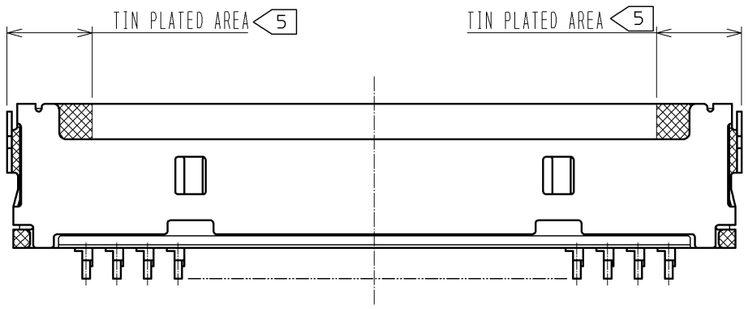

APPLICATION DIAGRAM(10:1)

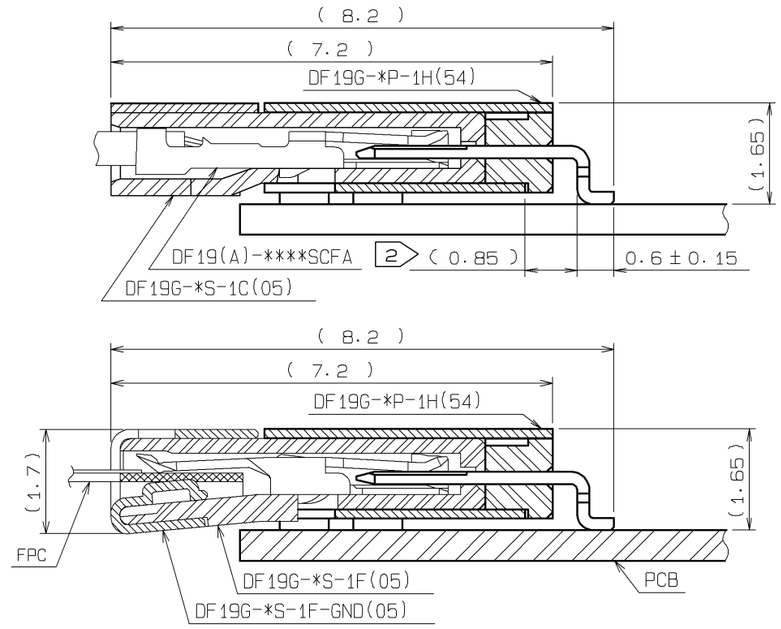

4 RECOMMENDED PATTERN(FREE)

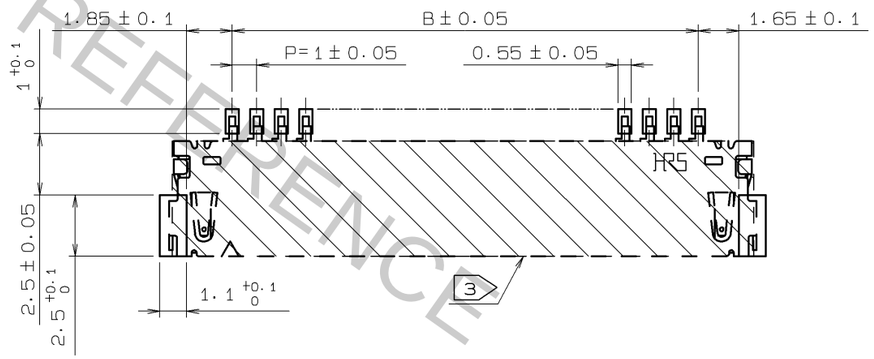

PART No.	CODE No.	NUMBER OF CONTACT	A	B	C
DF19G- 8P-1H(54)	CL685-0021-0-54	8	11.55	7	11.95
DF19G-14P-1H(54)	CL685-0004-0-54	14	17.55	13	17.95
DF19G-20P-1H(54)	CL685-0006-6-54	20	23.55	19	23.95
DF19G-30P-1H(54)	CL685-0015-7-54	30	33.55	29	33.95

NOTES 1 :LEAD CO-PLANARITY SHALL BE 0.1mm MAX.
2 :IF SOLDERING PADS IS LONG, THERE IS A POSSIBILITY THAT IT WILL MAKE CONTACT WITH THE METAL SHELL.
3 :IF THERE IS PATTERN ON ▨ PART, THERE IS A POSSIBILITY THAT IT WILL MAKE CONTACT WITH THE METAL SHELL.
4 :RECOMMENDED THICKNESS OF CREAM SOLDER PASTE:0.15mm
OPEN AREA RATIO:100%

NO.	MATERIAL	FINISH, REMARKS
5	POLYESTER	CLEAR(COVER TAPE)
4	PS	CLEAR(EMBOSSED CARRIER TAPE)
3	PHOSPHOR BRONZE	CONTACT AREA:GOLD PLATED 0.1μm min LEAD AREA:TIN-COPPER PLATED 1μm min UNDER PLATING:NICKEL PLATED 1μm min
2	PHOSPHOR BRONZE	LEAD AREA:TIN PLATED 1μm min 5 UNDER PLATING:NICKEL PLATED 0.5μm min
1	POLYAMIDE	BLACK, UL94V-0

UNITS	SCALE	COUNT	DESCRIPTION OF REVISIONS	DESIGNED	CHECKED	DATE
mm	5 : 1					

HIROSE ELECTRIC CO., LTD.

APPROVED	:TS. SAKATA	09.03.02	DRAWING NO.	EDC3-311646-01
CHECKED	:TS. KUMAZAWA	09.03.02	PART NO.	DF19G-*P-1H(54)
DESIGNED	:SN. KOBAYASHI	09.02.27	CODE NO.	CL685-
DRAWN	:SN. KOBAYASHI	09.02.27		1/2

HRS DRAWING FOR REFERENCE

Oct.1.2018 Copyright 2018 HIROSE ELECTRIC CO., LTD. All Rights Reserved.
In case that the application demands a high level of reliability, such as automotive,
please contact a company representative for further information.

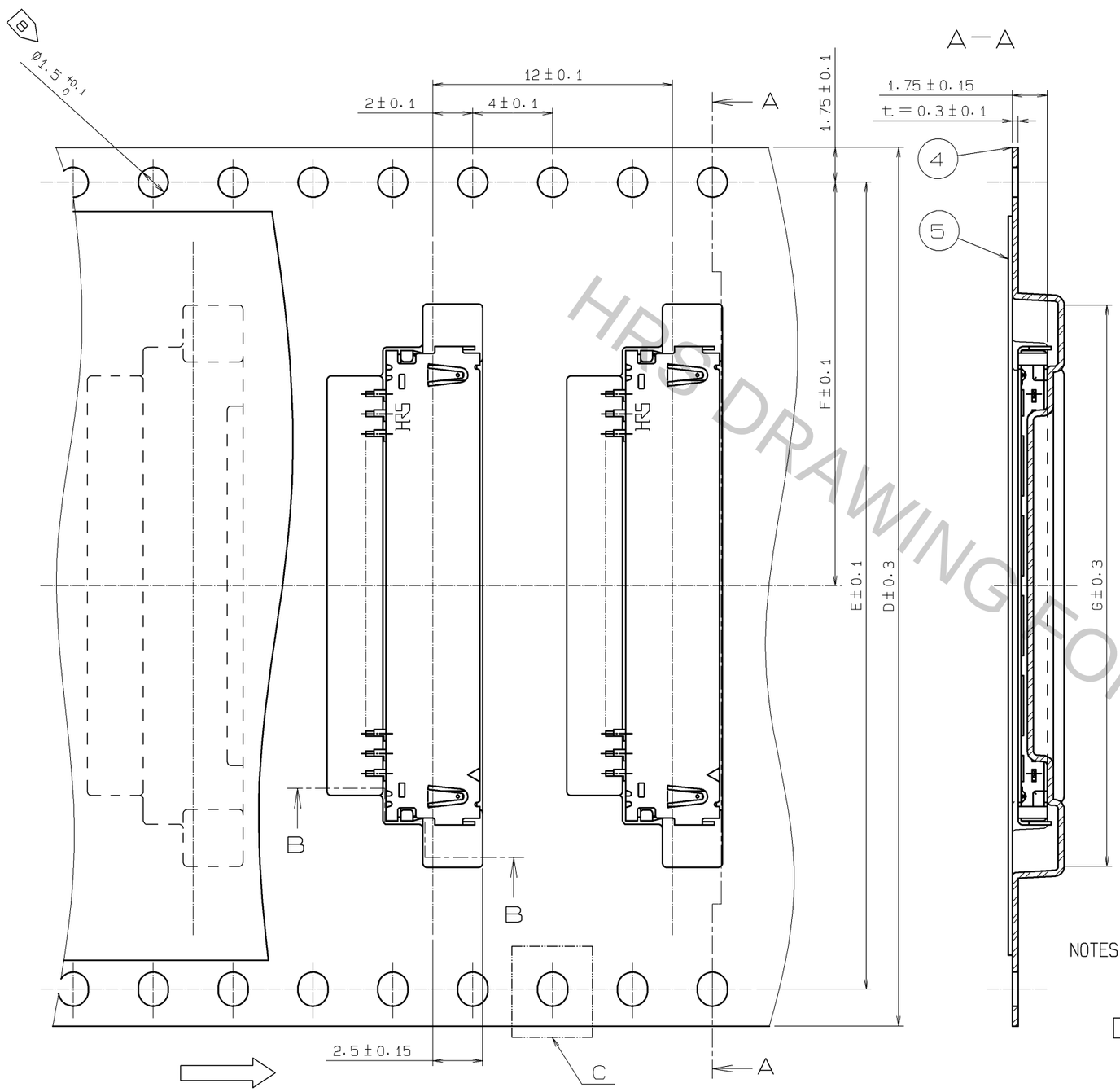

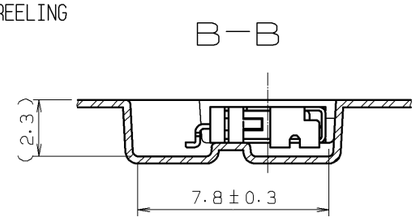

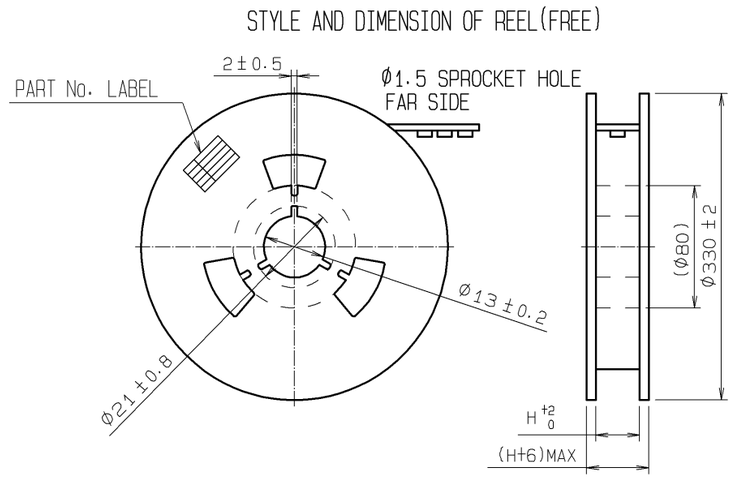

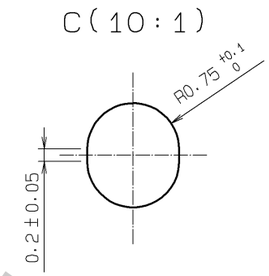

SUPPLIER
QUANTITY
PART No.
CODE No.
DATE OF MANUFACTURED

DETAIL OF PART No. LABEL

生産月日	年　月　日
図番	CL685−****−*−54
品名	DF19G−*P−1H(54)
納入数量	1000Ko
納入者	ヒロセ電機株式会社

PART No.	CODE No.	NUMBER OF CONTACT	D	E	F	G	H
DF19G- 8P-1H(54)	CL685-0021-0-54	8	24	-	11.5	16.1	24.4
DF19G-14P-1H(54)	CL685-0004-0-54	14	44	40.4	20.2	22.1	44.4
DF19G-20P-1H(54)	CL685-0006-6-54	20	44	40.4	20.2	28.1	44.4
DF19G-30P-1H(54)	CL685-0015-7-54	30	56	52.4	26.2	38.1	56.4

NOTES 6 : 1 REEL 1000 CONNECTORS.
7 : AT THE BEGINNING OF THE REEL, 30 COMPONENTS SHALL BE EMPTY.
AT THE END OF THE REEL, 20 COMPONENTS SHALL BE EMPTY.
8 : THE SENDING HOLE OF 8 OF CONTACTS BECOMES ONLY ONE SIDE.
(DRAWING UP Ø1.5 SPROCKET HOLE)

HRS DRAWING FOR REFERENCE

DRAWING NO.	EDC3-311646-01
PART NO.	DF19G-*P-1H(54)
CODE NO.	CL685-

△ 2/2