Oct.1.2018 Copyright 2018 HIROSE ELECTRIC CO., LTD. All Rights Reserved.
In case that the application demands a high level of reliability, such as automotive, please contact a company representative for further information.

	COUNT	DESCRIPTION OF REVISIONS	BY	CHKD	DATE		COUNT	DESCRIPTION OF REVISIONS	BY	CHKD	DATE
△					. .	△					. .
△					. .	△					. .
△					. .	△					. .

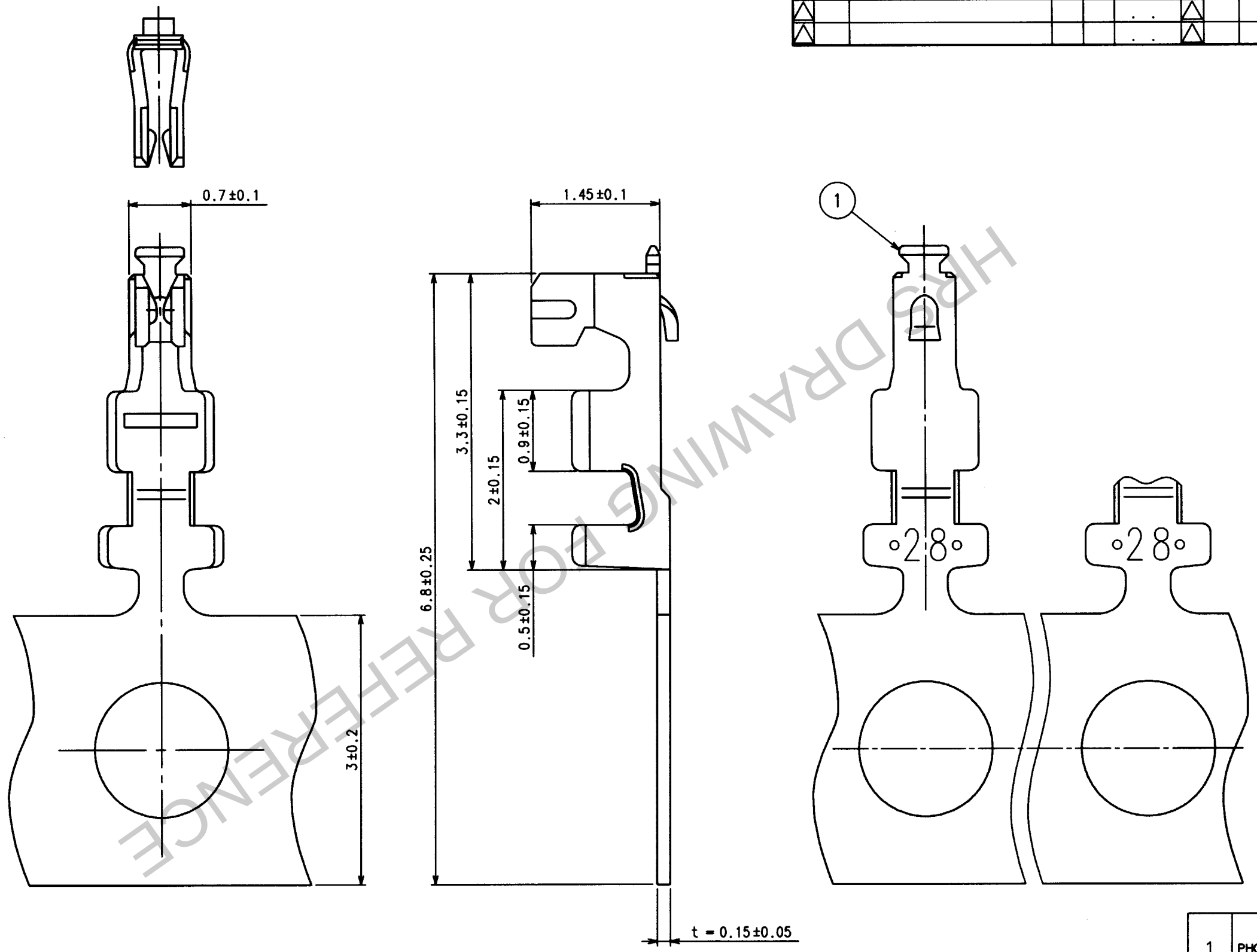

HRS DRAWING FOR REFERENCE

NOTES1.PER REEL:10000 CONTACTS.

NO.	MATERIAL	FINISH, REMARKS	NO.	MATERIAL	FINISH, REMARKS
			1	PHOSPHOR BRONZE	CONTACT AREA:GOLD PLATED 0.2μm MIN. OUTSIDE OF BARREL:TIN PLATED 1μm MIN. OTHERS:NICKEL PLATED 0.5μm MIN.

CODE NO.(OLD)	DRAWN	DESIGNED	CHECKED	APPROVED	RELEASED
	S. Ono 02.08.29	S. Ono 02.08.29	T. Miyazaki 02.08.29	K. Katayose '02 8.30	. .

SCALE 20 : 1	DRAWING NO. EDC3-164278	PART NO. DF20F-2830SCFA
UNITS mm	HRS HIROSE ELECTRIC CO., LTD	CODE NO. CL686-0042-6 1/1

TO

FORM NO.229