Oct.1.2018 Copyright 2018 HIROSE ELECTRIC CO., LTD. All Rights Reserved.
In case that the application demands a high level of reliability, such as automotive, please contact a company representative for further information.

	COUNT	DESCRIPTION OF REVISIONS	BY	CHKD	DATE		COUNT	DESCRIPTION OF REVISIONS	BY	CHKD	DATE
1	2	RE-H-06269	T.Y	T.S	04.5.21						. .
					. .						. .
					. .						. .

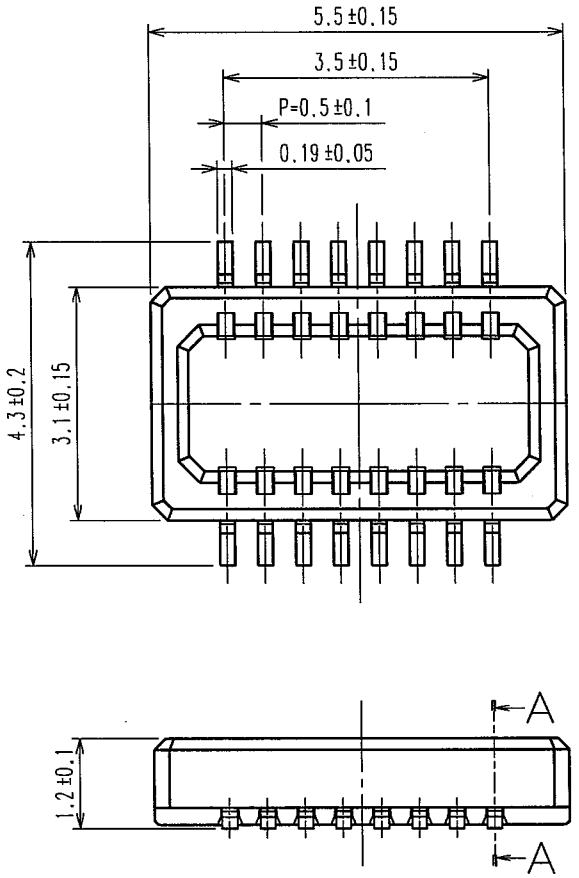

Fig.1 : RECOMMENDED PATTERN

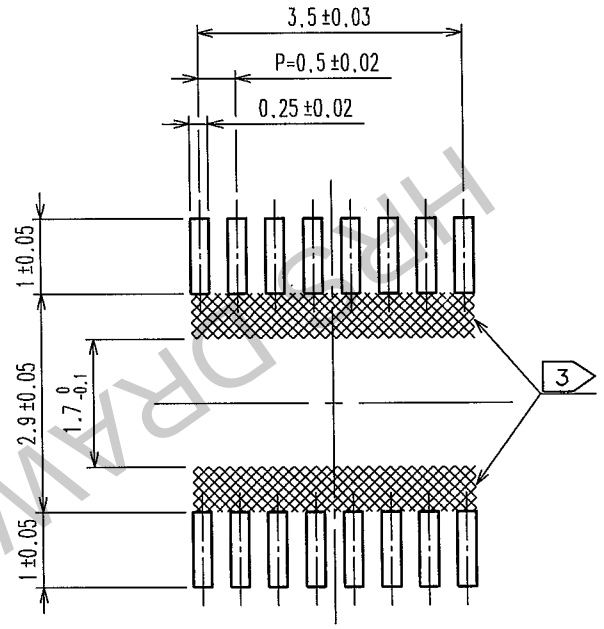

Fig.2 : PLATING SPECIFICATION (40:1)

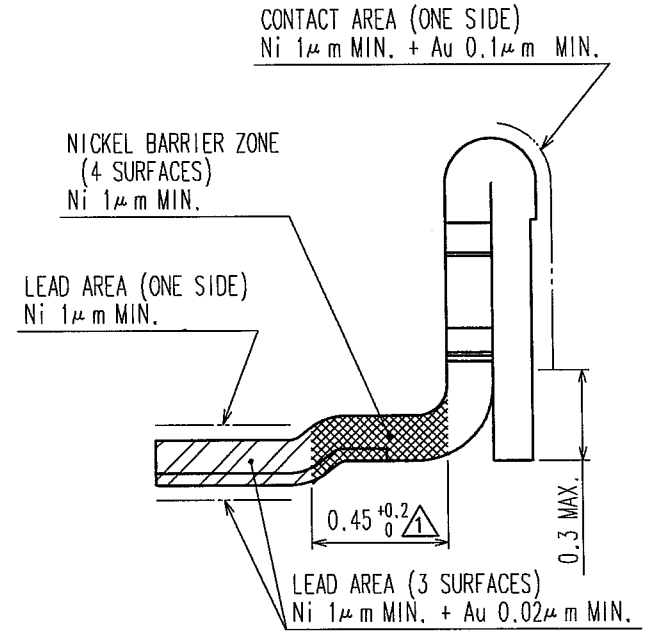

OTHERS : Ni 1μm MIN. + Au FLASH

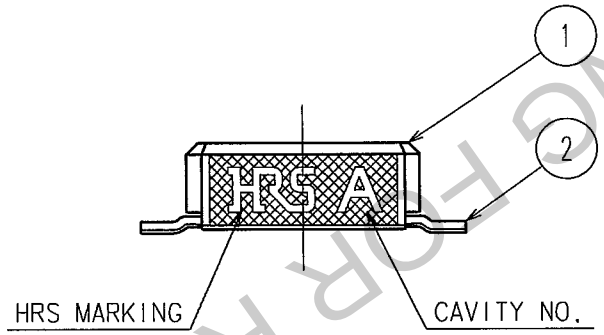

Fig.3 : A-A CROSS SECTION VIEW

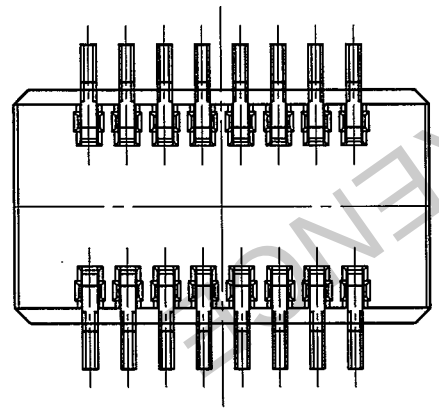

Fig.4 : MATING VIEW

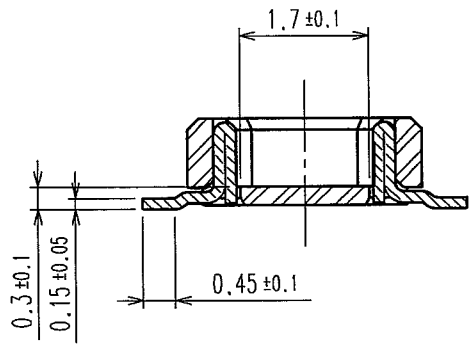

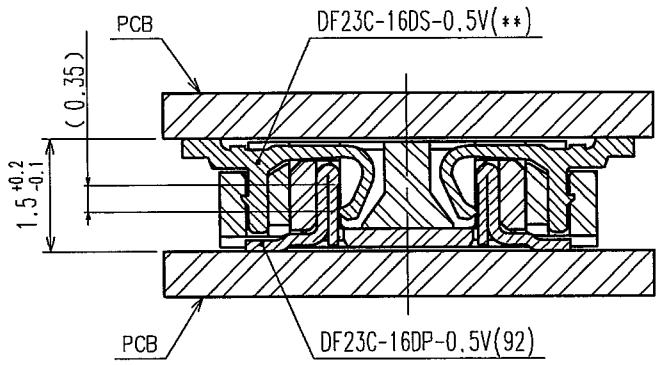

NOTES 1 LEAD CO-PLANARITY SHALL BE 0.1mm MAX.
2 REFER TO Fig.2
3 WHEN A PART MARKED WITH ▒ HAS A PATTERN BUT NO RESIST ON IT, TAKE CARE TO PREVENT THE CONNECTOR FROM TOUCHING IT.

NO.	MATERIAL	FINISH, REMARKS	NO.	MATERIAL	FINISH, REMARKS
2	PHOSPHOR BRONZE	2	4	POLYESTER	CLEAR
1	LCP	BLACK,UL94V-0	3	PS	CLEAR

CODE NO.(OLD)	DRAWN	DESIGNED	CHECKED	APPROVED	RELEASED
	A.Hirota '03.06.12	T.Yamamoto '03.06.12	K.Akiyama '03.06.12	K.Akiyama '03.06.12	. .

SCALE 10 : 1
UNITS mm

DRAWING NO. EDC3-164009-11
PART NO. DF23C-16DP-0.5V(92)
HRS HIROSE ELECTRIC CO., LTD
CODE NO. CL688-0807-4-92
1/2

TO

HRS DRAWING FOR REFERENCE ONLY

Oct.1.2018 Copyright 2018 HIROSE ELECTRIC CO., LTD. All Rights Reserved.
In case that the application demands a high level of reliability, such as automotive, please contact a company representative for further information.

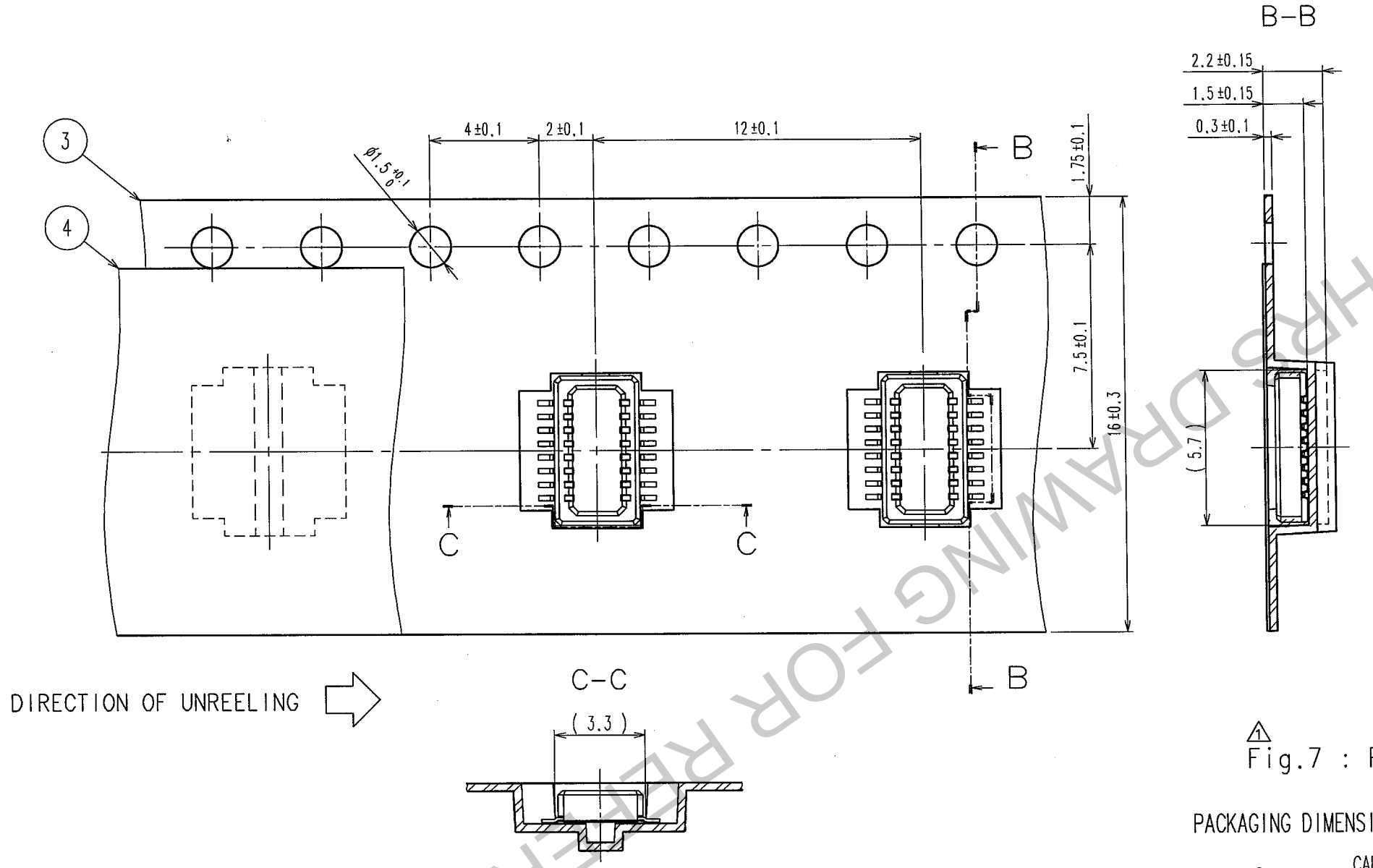

Fig.6 : REEL DIMENSIONS (FREE)

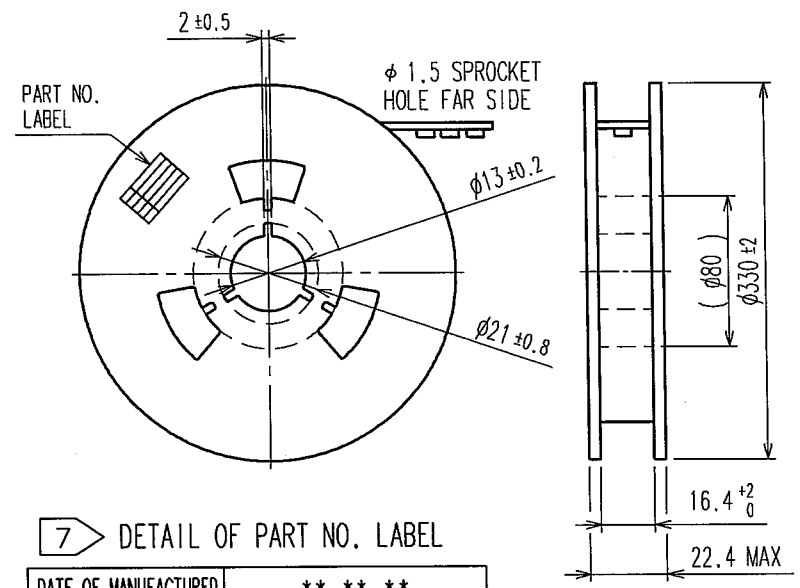

7 DETAIL OF PART NO. LABEL

DATE OF MANUFACTURED	** ** **
CODE NO.	CL688-0807-4-92
PART NO.	DF23C-16DP-0.5V(92)
QUANTITY	2000
SUPPLIER	HIROSE ELECTRIC CO.,LTD.

6 Fig.5 : TAPING

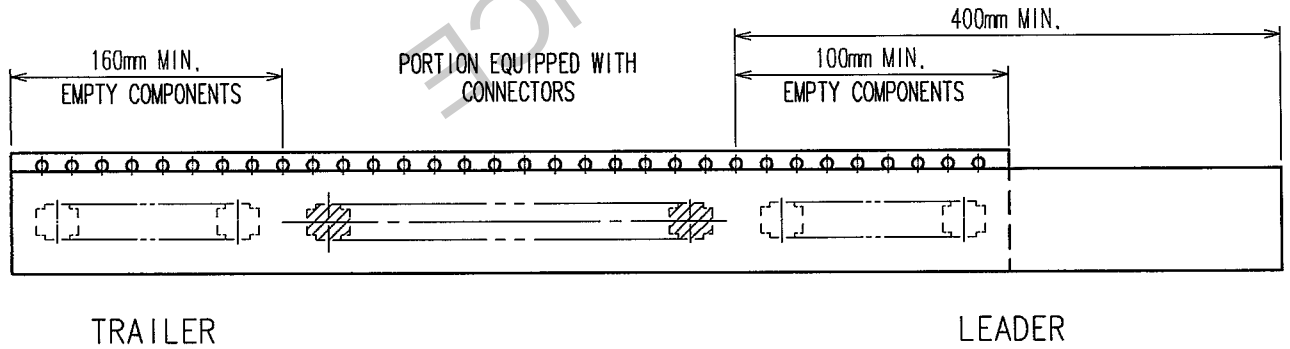

1 Fig.7 : PACKAGING SPECIFICATION (FREE)

PACKAGING DIMENSION

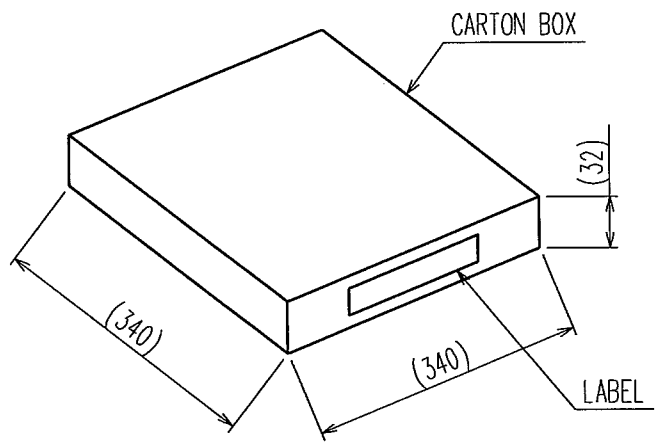

DETAIL OF LABEL

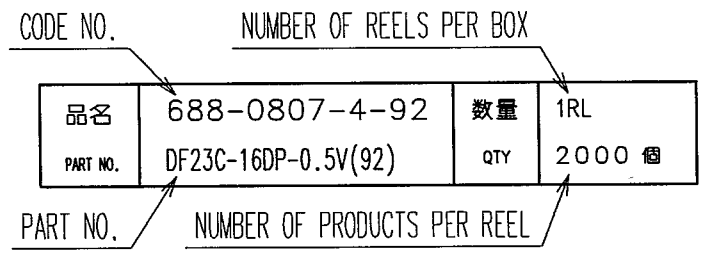

NOTES 4 PER REEL 2000 CONNECTORS
5 THE DIMENSIONS IN PARENTHESES ARE FOR REFERENCE.
6 REFER TO JIS C 0806 (PACKAGING OF COMPONENTS FOR AUTOMATIC HANDLING)
7 DETAIL OF PART NO. LABEL IS WRITTEN IN JAPANESE.

TO

CODE NO.(OLD)	DRAWN	DESIGNED	CHECKED	APPROVED	RELEASED
	A.Hirota '03.06.12	T.Yamamoto '03.06.12	K.Akiyama '03.06.12	K.Akiyama '03.06.12	

SCALE 5 : 1	DRAWING NO. EDC3-164009-11	PART NO. DF23C-16DP-0.5V(92)
UNITS mm	HRS HIROSE ELECTRIC CO., LTD	CODE NO. CL688-0807-4-92

2

HRS DRAWING FOR REFERENCE