Oct.1.2018 Copyright 2018 HIROSE ELECTRIC CO., LTD. All Rights Reserved.
In case that the application demands a high level of reliability, such as automotive, please contact a company representative for further information.

| | COUNT | DESCRIPTION OF REVISIONS | BY | CHKD | DATE | | COUNT | DESCRIPTION OF REVISIONS | BY | CHKD | DATE |
|---|---|---|---|---|---|---|---|---|---|---|---|
| 1 | 11 | RE-H-03895 | T.A | C.H | '20.09.14 | | | | | | . . |
| | | | | | . . | | | | | | . . |
| | | | | | . . | | | | | | . . |

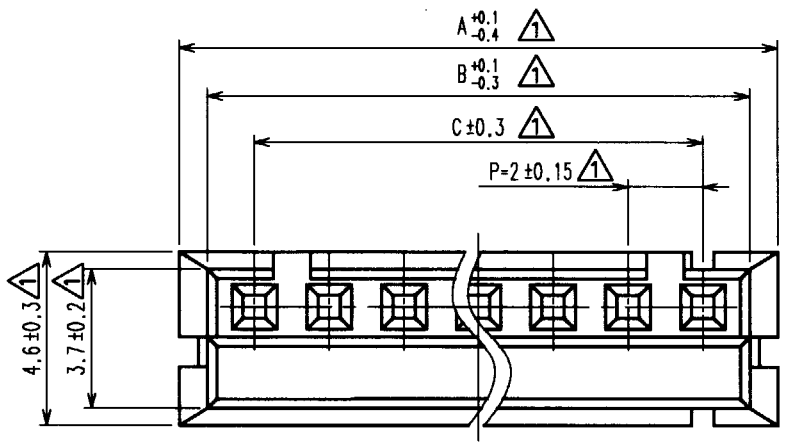


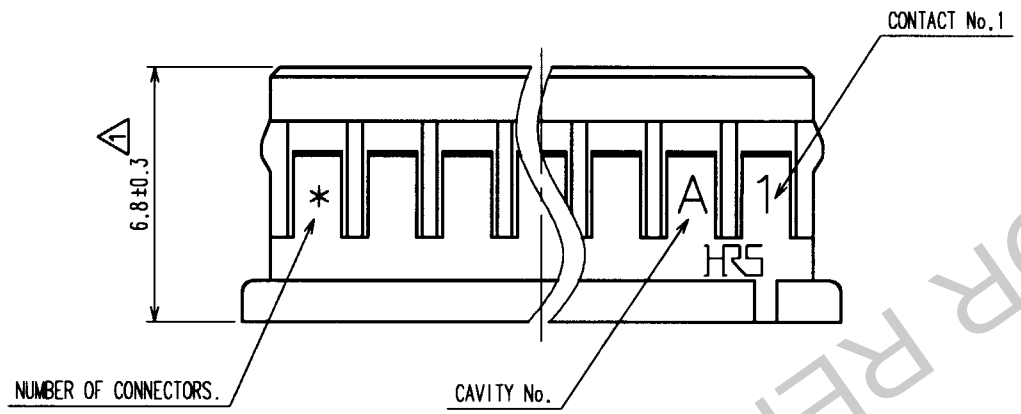


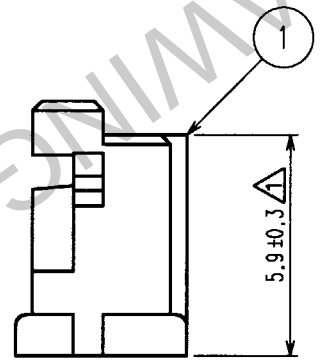


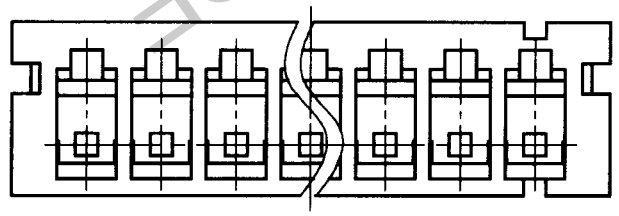

| CODE No. 1 | PART No. | NUMBER OF CONNECTORS | A | B | C |
|---|---|---|---|---|---|
| 543-0003-8 | DF3- 2S-2C | 2 | 6 | 4.5 | 2 |
| 543-0004-0 | DF3- 3S-2C | 3 | 8 | 6.5 | 4 |
| 543-0005-3 | DF3- 4S-2C | 4 | 10 | 8.5 | 6 |
| 543-0006-6 | DF3- 5S-2C | 5 | 12 | 10.5 | 8 |
| 543-0007-9 | DF3- 6S-2C | 6 | 14 | 12.5 | 10 |
| 543-0008-1 | DF3- 7S-2C | 7 | 16 | 14.5 | 12 |
| 543-0009-4 | DF3- 8S-2C | 8 | 18 | 16.5 | 14 |
| 543-0010-3 | DF3- 9S-2C | 9 | 20 | 18.5 | 16 |
| 543-0011-6 | DF3-10S-2C | 10 | 22 | 20.5 | 18 |
| 543-0012-9 | DF3-11S-2C | 11 | 24 | 22.5 | 20 |
| 543-0013-1 | DF3-12S-2C | 12 | 26 | 24.5 | 22 |
| 543-0014-4 | DF3-13S-2C | 13 | 28 | 26.5 | 24 |
| 543-0015-7 | DF3-14S-2C | 14 | 30 | 28.5 | 26 |
| 543-0016-0 | DF3-15S-2C | 15 | 32 | 30.5 | 28 |

Note 1:The minimum ordering quantity is one package(containing 100 pieces).
1 2:(NOTE DELETED)
1 3:(NOTE DELETED)

UNCONTROLLED DRAWING FOR REFERENCE

| NO. | MATERIAL | FINISH, REMARKS | NO. | MATERIAL | FINISH, REMARKS |
|---|---|---|---|---|---|
| | | | 1 | POLYAMIDE | BLACK, UL94V-0 |

| CODE NO.(OLD) | DRAWN | DESIGNED | CHECKED | APPROVED | RELEASED |
|---|---|---|---|---|---|
| | K.TANAKA | K.TANAKA | T.YAMAGUCHI | M.YAMAMOTO | |
| | '88.03.28 | '88.03.28 | '88.03.29 | '88.03.29 | . . |

SCALE 5 : 1
UNITS mm

DRAWING NO. EDC3-162387-01

HRS HIROSE ELECTRIC CO., LTD

PART NO. DF3-*S-2C

CODE NO. CL543

1/1

TO