Oct.1.2018 Copyright 2018 HIROSE ELECTRIC CO., LTD. All Rights Reserved.
In case that the application demands a high level of reliability, such as automotive, please contact a company representative for further information.

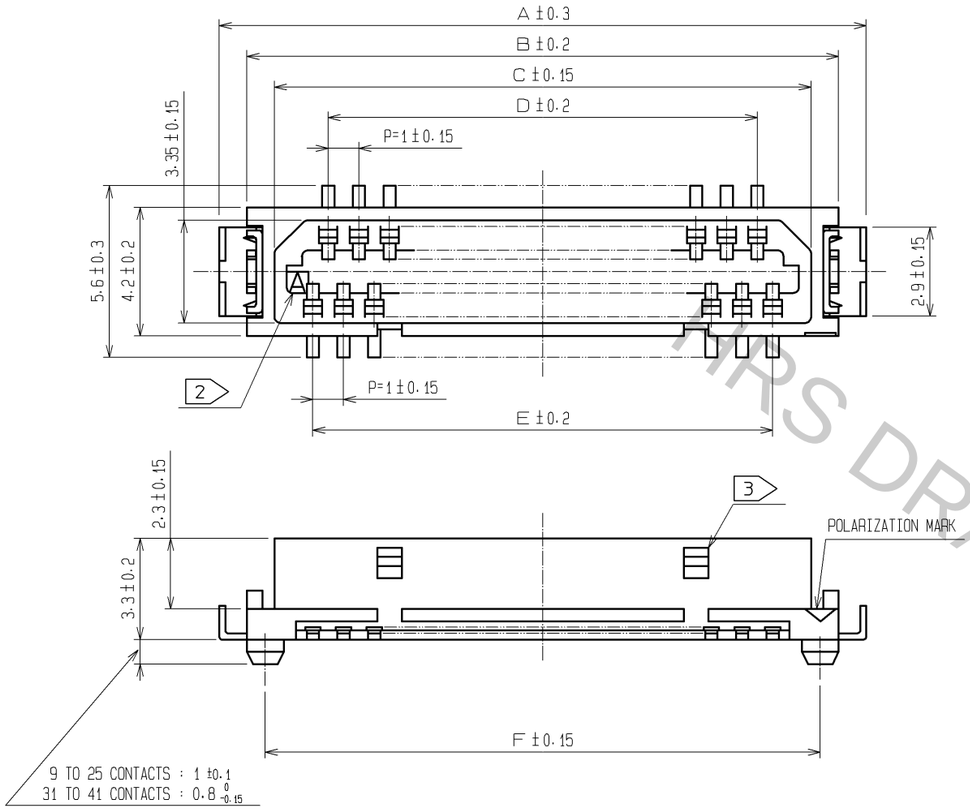

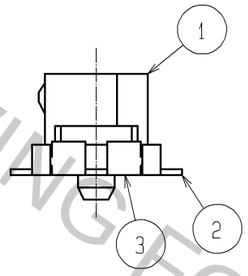

RECOMMENDED PATTERN

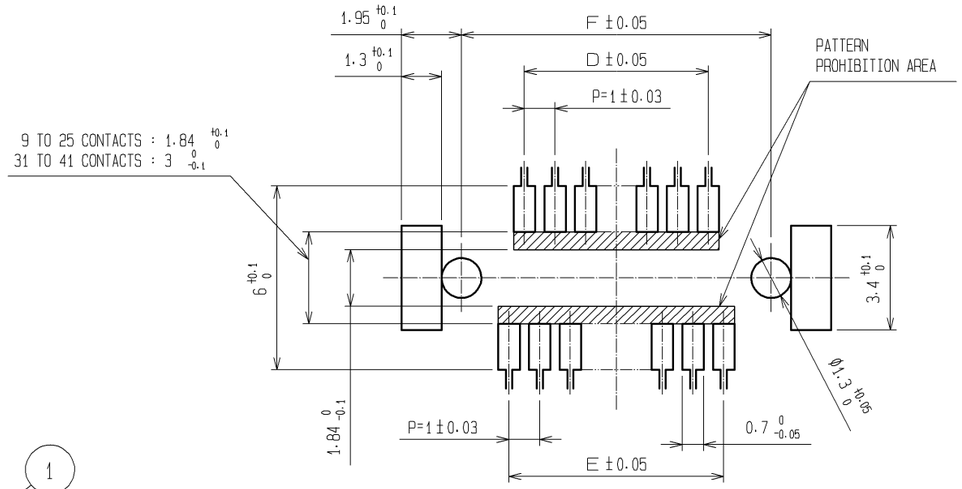

PART No.	CODE No.	NUMBER OF CONTACTS	A	B	C	D	E	F
DF9- 9S-1V(32)	CL540-0054-0-32	9	10.1	8.3	6.5	3	4	7.1
DF9-11S-1V(32)	CL540-0055-2-32	11	11.1	9.3	7.5	4	5	8.1
DF9-13S-1V(32)	CL540-0056-5-32	13	12.1	10.3	8.5	5	6	9.1
DF9-15S-1V(32)	CL540-0057-8-32	15	13.1	11.3	9.5	6	7	10.1
DF9-17S-1V(32)	CL540-0058-0-32	17	14.1	12.3	10.5	7	8	11.1
DF9-19S-1V(32)	CL540-0059-3-32	19	15.1	13.3	11.5	8	9	12.1
DF9-21S-1V(32)	CL540-0060-2-32	21	16.1	14.3	12.5	9	10	13.1
DF9-23S-1V(32)	CL540-0061-5-32	23	17.1	15.3	13.5	10	11	14.1
DF9-25S-1V(32)	CL540-0062-8-32	25	18.1	16.3	14.5	11	12	15.1
DF9-31S-1V(32)	CL540-0063-0-32	31	21.1	19.3	17.5	14	15	18.1
DF9-41S-1V(32)	CL540-0213-1-32	41	26.1	24.3	22.5	19	20	23.1

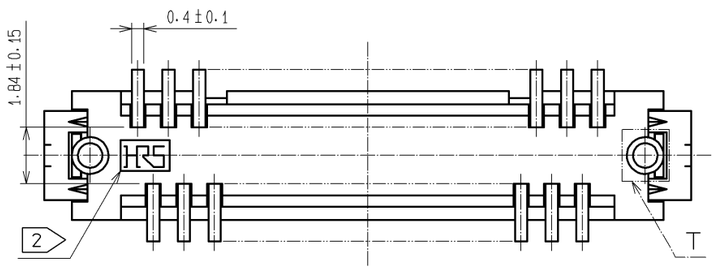

T(10:1)

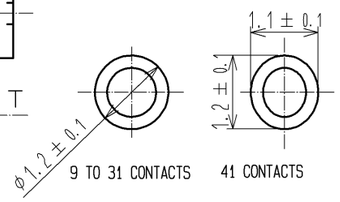

NOTES 1 : LEAD CO-PLANARITY INCLUDE REINFORCED METAL FITTINGS SHALL BE 0.1mm MAX.
2 HRS MARK AND CAV NO. ARE INDICATED IN APPROX POSITION SHOWN.
3 9 TO 25 CONTACT CONNECTORS HAVE ONE LOCK AT CENTER OF HOUSING.
31 TO 41 CONTACT CONNECTORS HAVE TWO LOCKS AS PER DRAWING.

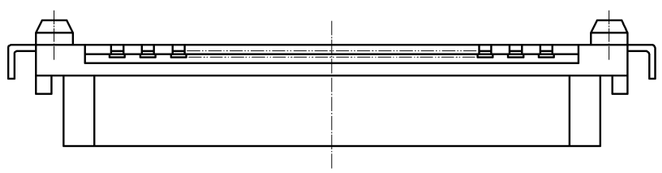

NO.	MATERIAL	FINISH , REMARKS	NO.	MATERIAL	FINISH , REMARKS
3	BRASS	SURFACE:TIN PLATED(REFLOW FINISH)1μm min UNDER PLATING:COPPER 0.3μm min	8	PS	REINFORCEMENT COLLAR
			7	PS	BLACK(PLASTIC REEL)
			6	POLYIMIDE	BROWN(HEAT-RESISTANCE TAPE)
2	PHOSPHOR BRONZE	TIN PLATED(HOT DIP) 1μm min	5	POLYESTER	CLEAR(COVER TAPE)
1	POLYAMIDE	BEIGE, UL94V-0	4	PS	CLEAR(EMBOSSED CARRIER TAPE)

UNITS	SCALE	COUNT	DESCRIPTION OF REVISIONS	DESIGNED	CHECKED	DATE
mm	5 : 1	△				

HRS HIROSE ELECTRIC CO., LTD.

APPROVED	KH. IKEDA	12.02.21
CHECKED	AR. TAKAHASHI	12.02.21
DESIGNED	SH. HOSODA	12.02.21
DRAWN	KR. AJITO	12.02.20

DRAWING NO. EDC3-341296-01
PART NO. DF9-*S-1V(32)
CODE NO. CL540-
△ 1/2

THIS DRAWING FOR REFERENCE

Oct.1.2018 Copyright 2018 HIROSE ELECTRIC CO., LTD. All Rights Reserved.
In case that the application demands a high level of reliability, such as automotive,
please contact a company representative for further information.

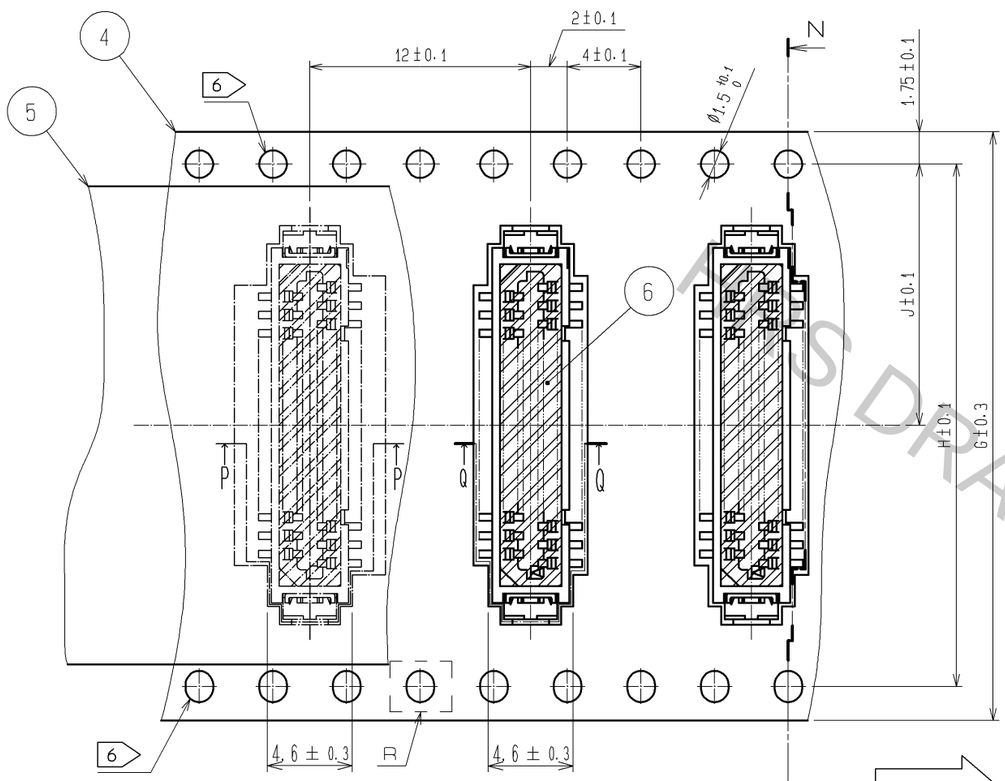

N-N(3:1)

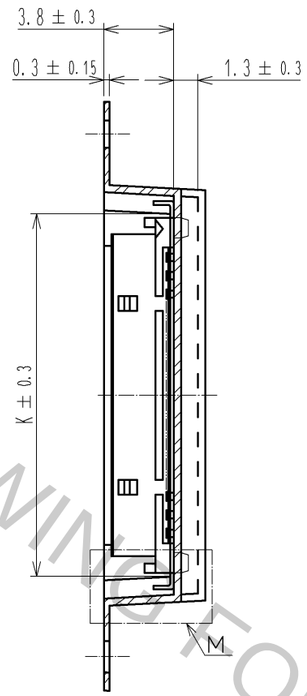

STYLE AND DIMENSION OF REEL (FREE)

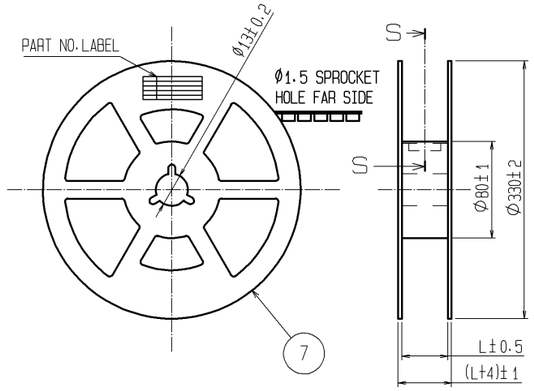

PART No.	CODE No.	NUMBER OF CONTACTS	G	H	J	K	L
DF9- 9S-1V(32)	CL540-0054-0-32	9	24	—	11.5	8.7	25.5
DF9-11S-1V(32)	CL540-0055-2-32	11	24	—	11.5	9.7	25.5
DF9-13S-1V(32)	CL540-0056-5-32	13	24	—	11.5	10.7	25.5
DF9-15S-1V(32)	CL540-0057-8-32	15	24	—	11.5	11.7	25.5
DF9-17S-1V(32)	CL540-0058-0-32	17	24	—	11.5	12.7	25.5
DF9-19S-1V(32)	CL540-0059-3-32	19	24	—	11.5	13.7	25.5
DF9-21S-1V(32)	CL540-0060-2-32	21	24	—	11.5	14.7	25.5
DF9-23S-1V(32)	CL540-0061-5-32	23	32	28.4	14.2	15.7	33.5
DF9-25S-1V(32)	CL540-0062-8-32	25	32	28.4	14.2	16.7	33.5
DF9-31S-1V(32)	CL540-0063-0-32	31	32	28.4	14.2	19.7	33.5
DF9-41S-1V(32)	CL540-0213-1-32	41	44	40.4	20.2	24.7	45.5

THIS DRAWING FOR REFERENCE

DIRECTION OF UNREELING

P-P(3:1) Q-Q(3:1)

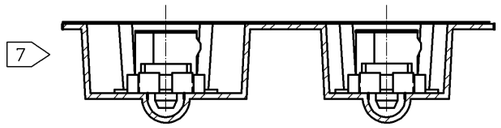

M(10:1)

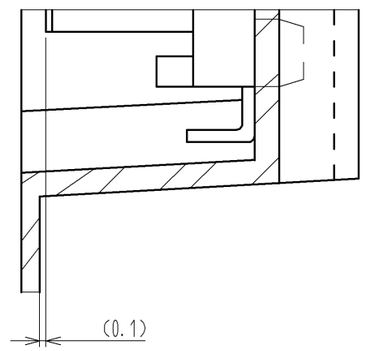

NOTES 4 : 1 REEL 1000 CONNECTORS.
5 : AT THE BEIGINNING OF THE REEL,
30 COMPONENTS SHALL BE EMPTY.
AT THE END OF THE REEL,
20 COMPONENTS SHALL BE EMPTY.
6 LET THE SENDING HOLE OF 9 TO 21 CONTACTS
BE ONLY THE UPPER ONE SIDE TOWARD A DRAWING.
THE SENDING HOLE OF 23 OR MORE CONTACTS
IS ESTABLISHED IN BOTH SIDES, AS SHOWN IN A FIGURE.
7 A POCKET SHAPE IS DIFFERET AT INTERVALS OF EACH
CAVITY NUMBER TO AVOID OVERLAP.
8 : PEEL FORCE REFERS TO JIS C 0806.
9 AFTER PACKING, ROLL 2 METERS OF THE REINFORCEMENT
COLLAR TO OUTER CIRCUMFERENCE OF TAPE AND REEL
POCKET, AND TAPE DOWN AT THE END THE COLLAR.

R(10:1)

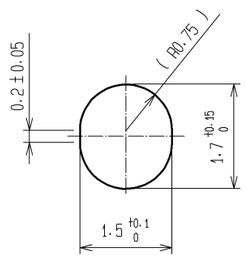

DETAIL OF PART NO. LABEL

- SUPPLIER
- QUANTITY
- PART NO.
- CODE NO.
- DATE OF MANUFACTURED

生産月日	年　月　日
図番	CL540-****-**-32
品名	DF9-*S-1V(32)
納入数量	1000Ko
納入者	ヒロセ電機(株)

S-S(FREE)

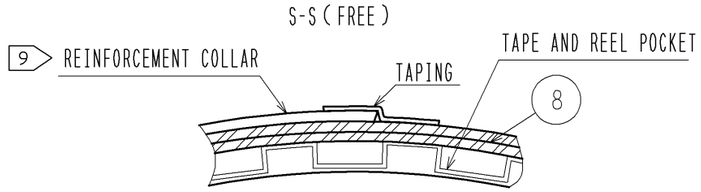

HRS	DRAWING NO.	EDC3-341296-01
	PART NO.	DF9-*S-1V(32)
	CODE NO.	CL540-

2/2

FORM HC0011-5-8