Oct.1.2018 Copyright 2018 HIROSE ELECTRIC CO., LTD. All Rights Reserved.
In case that the application demands a high level of reliability, such as automotive,
please contact a company representative for further information.

COUNT	DESCRIPTION OF REVISIONS	BY	CHKD	DATE	COUNT	DESCRIPTION OF REVISIONS	BY	CHKD	DATE
△				. .	△				. .
△				. .	△				. .
△				. .	△				. .

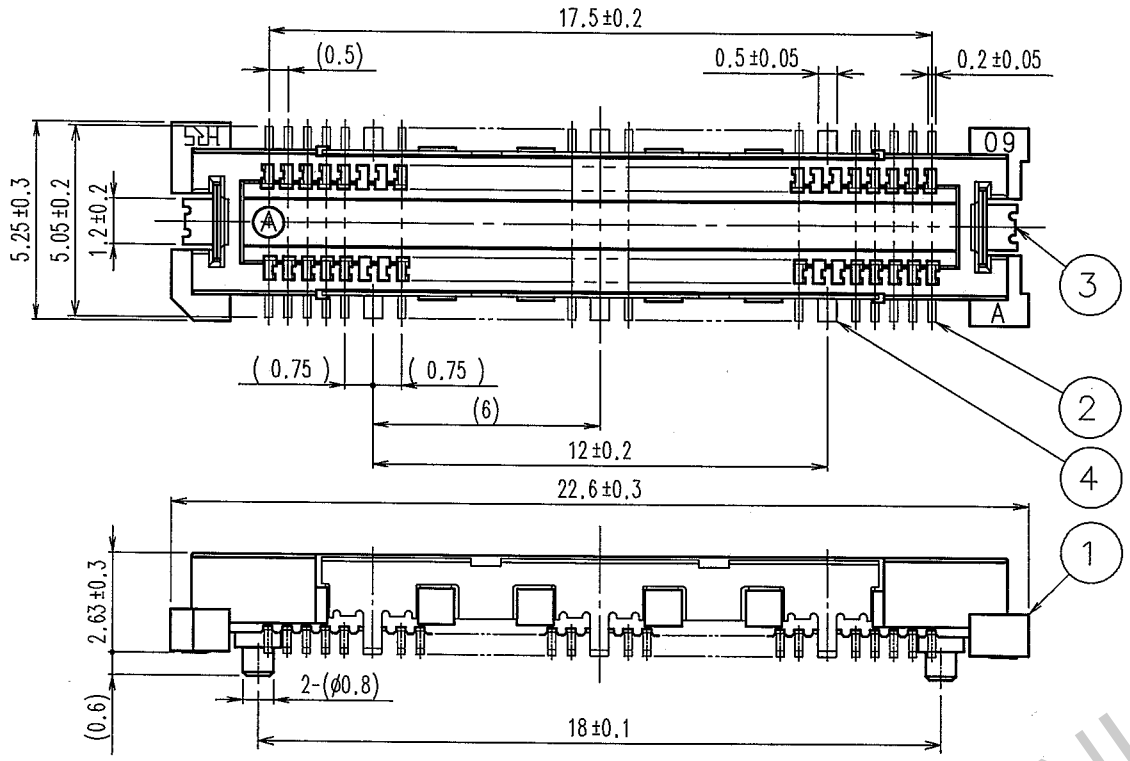

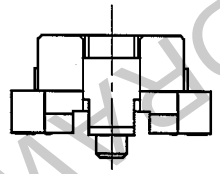

RECOMMENDED LAND PATTERN DIMENSION OF PCB

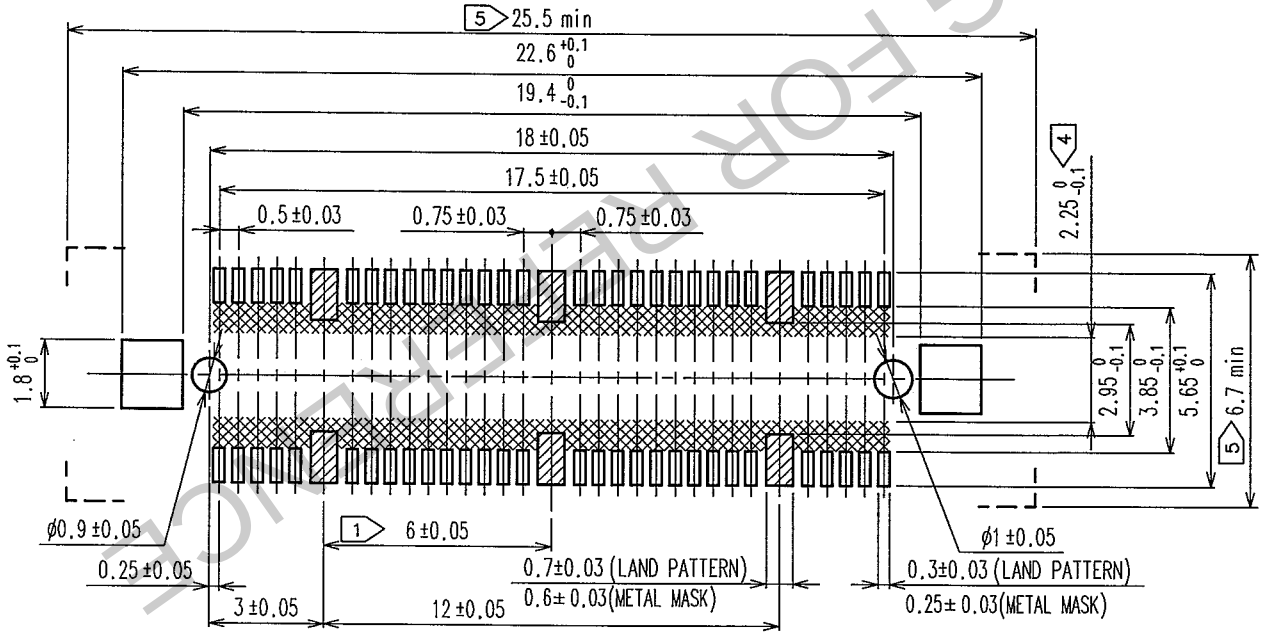

SIGNAL PORTION CROSS SECTION (10:1)

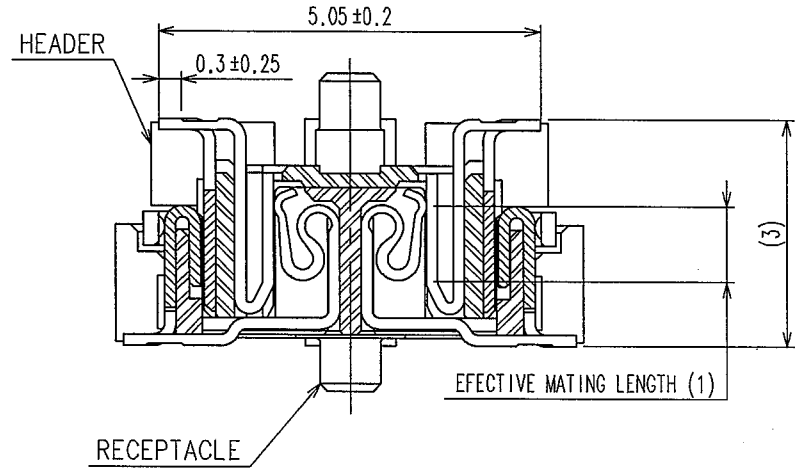

GROUND PORTION CROSS SECTION (10:1)

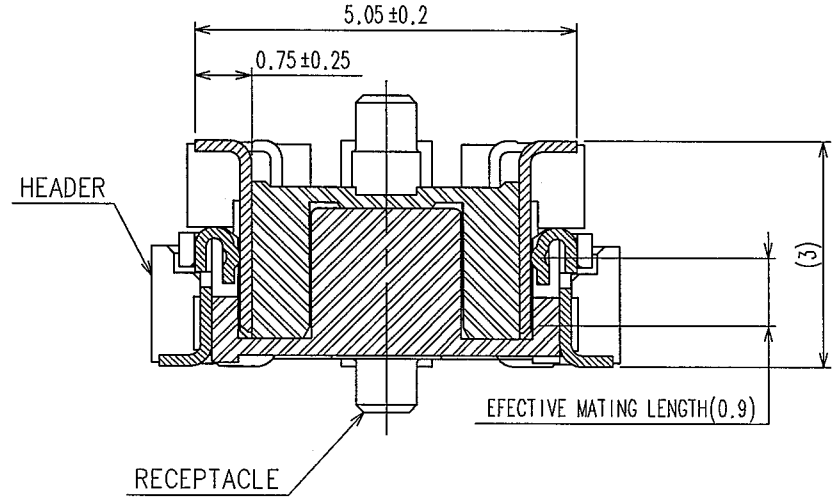

NOTES
1 6 HATCHED ▨ PARTS: GROUND CIRUIT.
2 SMT LEAD-COPLANARITY: 0.1 MAX.
3 THIS PRODUCT HAS NO POLARITY TO PATTERN FOR MOUNTING.
4 MAKE SURE WIDTH OF PATTERN IS WITHIN THAT OF LAND, OR LEAD MAY TOUCH PATTERN. (THIS APPLIES TO HATCHED ▩ AREA.)
5 DO NOT MOUNT OTHER DEVICES ONTO [ ] AREA, OR MATING PAIR CANNOT BE MATED.
6 DIMENSION IN PARENTHESES ARE FOR REFERENCE.

NO.	MATERIAL	FINISH, REMARKS	NO.	MATERIAL	FINISH, REMARKS
3,4	PHOSPHOR BRONZE	TIN PLATING	2	COPPER ALLOY	CONTACT AREA : GOLD 0.1μm min.
1	LCP	BEIGE UL94V-0			MOUNTING AREA : GOLD FLASH
					UNDER PLATING : NICKEL 1μm min.

CODE NO.(OLD)	DRAWN	DESIGNED	CHECKED	APPROVED	RELEASED
CL	T.YANAGISAWA '05.10.11	J. Noda '05.10.12	H. Ozawa '05.10.12	H. Okawa '05.10.12	

SCALE 5 : 1
UNITS mm

DRAWING NO. EDC3-152614-25

HRS HIROSE ELECTRIC CO.,LTD.

PART NO. FX11A-60P/6-SV0.5(71)

CODE NO. CL573-0602-4-71

1/1

FORM NO.229

TO

HRS DRAWING FOR REFERENCE