Oct.1.2018 Copyright 2018 HIROSE ELECTRIC CO., LTD. All Rights Reserved.
In case that the application demands a high level of reliability, such as automotive, please contact a company representative for further information.

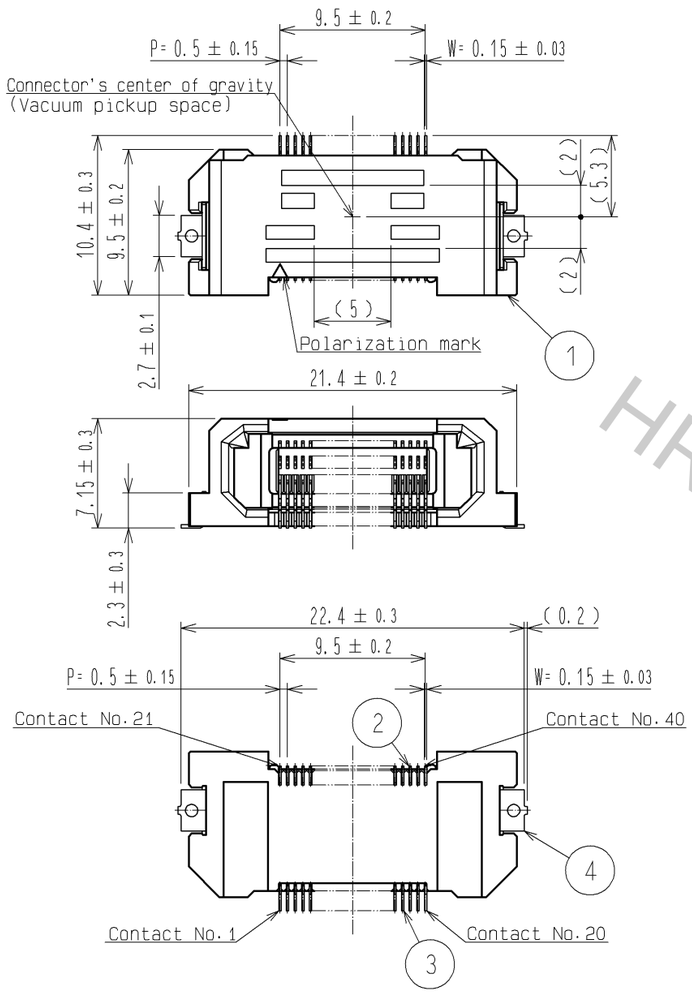

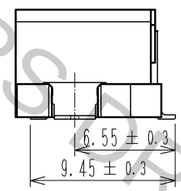

5 Recommended land pattern dimension of PCB

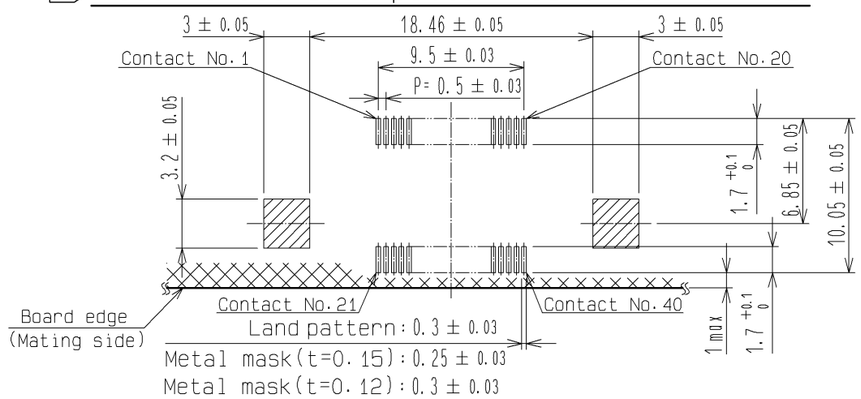

Drawing for mating(No scale)

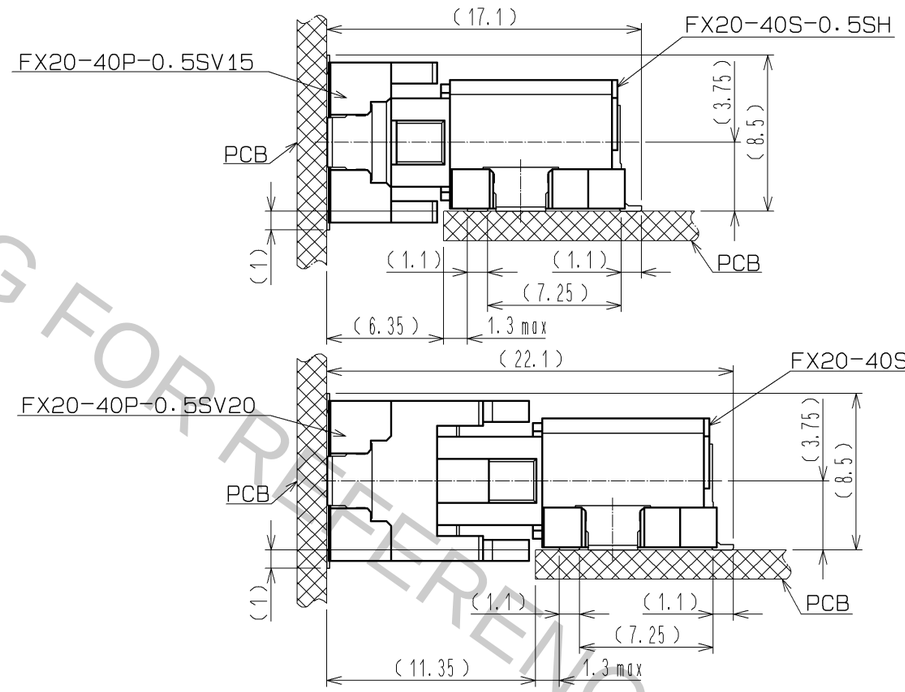

2 Drawing for packing(No scale)

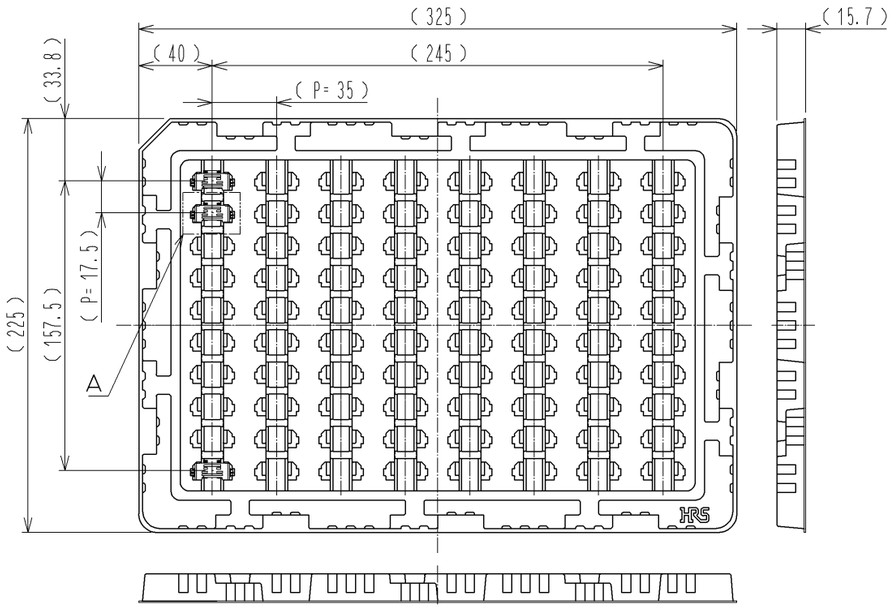

A(1:1)

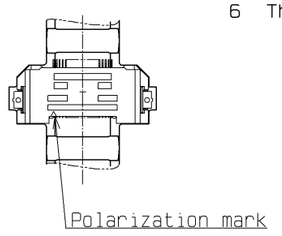

1 Lead CO-Planarity is 0.1mm MAX.
2 This is packaged in tray.(80pcs/tray)
3 Blemish and hit mark can be occured through out the manufacturing process which dosen't affect quality level.
4 Please note that excessive wrenching force could damage this connector. Please refer to the guideline for detailed regulations of the mating method.
5 No prohibited area for printing pattern or via hole. PCB resist can be printed optionally.
6 The dimensions in parentheses are for references.

NO.	MATERIAL	FINISH , REMARKS	NO.	MATERIAL	FINISH , REMARKS
1	LCP	BLACK UL94V-0	4	BRASS	TIN-PLATING 1μm
			2, 3	PHOSPHOR BRONZE	CONTACT AREA:GOLD 0.1μm LEAD AREA:GOLD 0.03μm UNDER PLATING:NICKEL 1μm

UNITS	SCALE	COUNT	DESCRIPTION OF REVISIONS	DESIGNED	CHECKED	DATE
mm	2 : 1					

HIROSE ELECTRIC CO., LTD.

APPROVED	HS. OKAWA	13. 09. 25	DRAWING NO.	EDC3-348426-00
CHECKED	KI. HIROKAWA	13. 09. 25	PART NO.	FX20-40S-0.5SH
DESIGNED	TS. OONO	13. 09. 25	CODE NO.	CL570-1601-8-00
DRAWN	TS. OONO	13. 09. 25		1/1

HRS DRAWING FOR REFERENCE