Oct.1.2018 Copyright 2018 HIROSE ELECTRIC CO., LTD. All Rights Reserved.
In case that the application demands a high level of reliability, such as automotive,
please contact a company representative for further information.

COUNT	DESCRIPTION OF REVISIONS	BY	CHKD	DATE	COUNT	DESCRIPTION OF REVISIONS	BY	CHKD	DATE
△				. .	△				. .
△				. .	△				. .
△				. .	△				. .

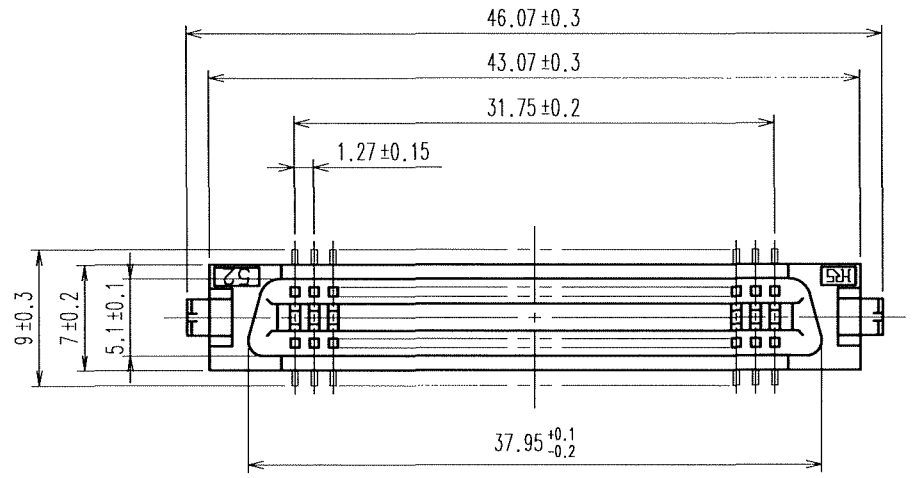

RECOMMENDED LAND PATTERN DIMENSION OF PCB (MOUNTING SIDE)

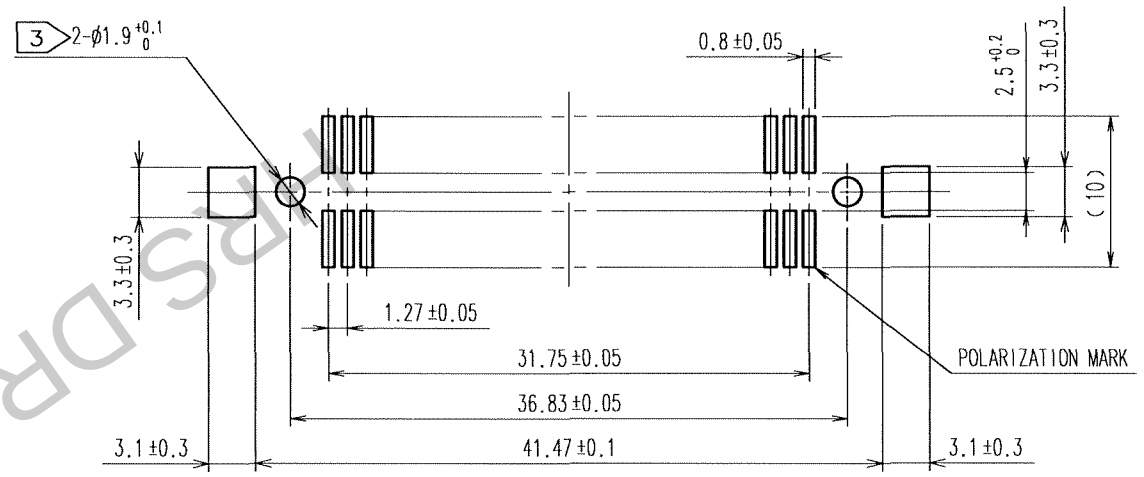

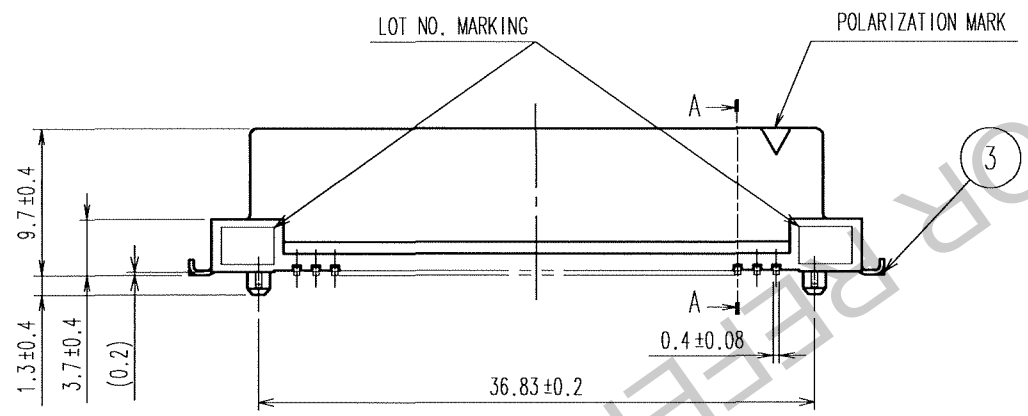

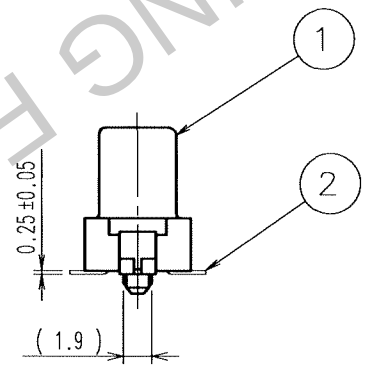

A–A

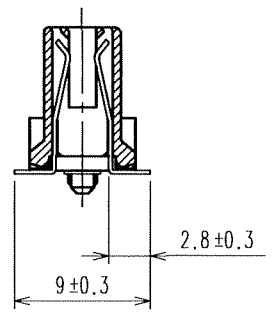

3 FIG.1(5 : 1)

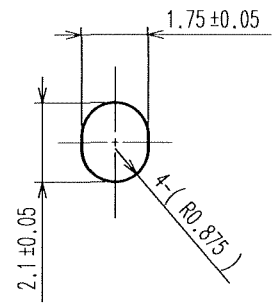

NOTES 1 LEAD CO-PLANARITY SHALL BE 0.15 MAX.
2 THE DIMENSIONS IN PARENTHESES ARE FOR REFERENCE.
3 IN CASE OF THE AUTOMATED MOUNTING, RECOMMENDED HOLE DIAMETER OF BOSS IS SHOWN IN FIG.1.

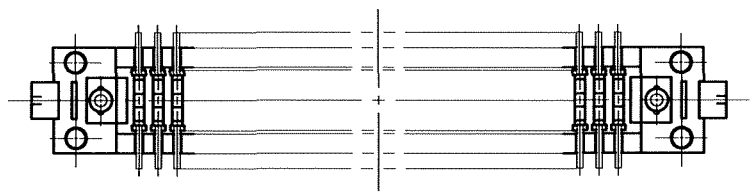

NO.	MATERIAL	FINISH, REMARKS
3	BRASS	TIN-PLATING
1	PPS	LIGHT BROWN (UL94V-0)

NO.	MATERIAL	FINISH, REMARKS
2	PHOSPHOR BRONZE	CONTACT AREA:GOLD 0.2μm min. LEAD AREA:TIN-PLATING 2μm min. UNDER PLATING:NICKEL 1.5μm min.

CODE NO.(OLD)	DRAWN	DESIGNED	CHECKED	APPROVED	RELEASED
CL	A.SUZUKAWA 06.02.08	H.Nakamura 06.02.13	H.Ozawa '06.02.13	H.Okawa '06.02.13	. .

SCALE 2 : 1
UNITS mm

DRAWING NO. EDC3-082417-21

HRS HIROSE ELECTRIC CO., LTD

PART NO. FX2-52S-1.27SVL(71)

CODE NO. CL572-2154-0-71

1/1

TO
PCK

HRS DRAWING FOR REFERENCE