Oct.1.2018 Copyright 2018 HIROSE ELECTRIC CO., LTD. All Rights Reserved.
In case that the application demands a high level of reliability, such as automotive,
please contact a company representative for further information.

COUNT	DESCRIPTION OF REVISIONS	BY	CHKD	DATE		COUNT	DESCRIPTION OF REVISIONS	BY	CHKD	DATE
△				. .	△					. .
△				. .	△					. .
△				. .	△					. .

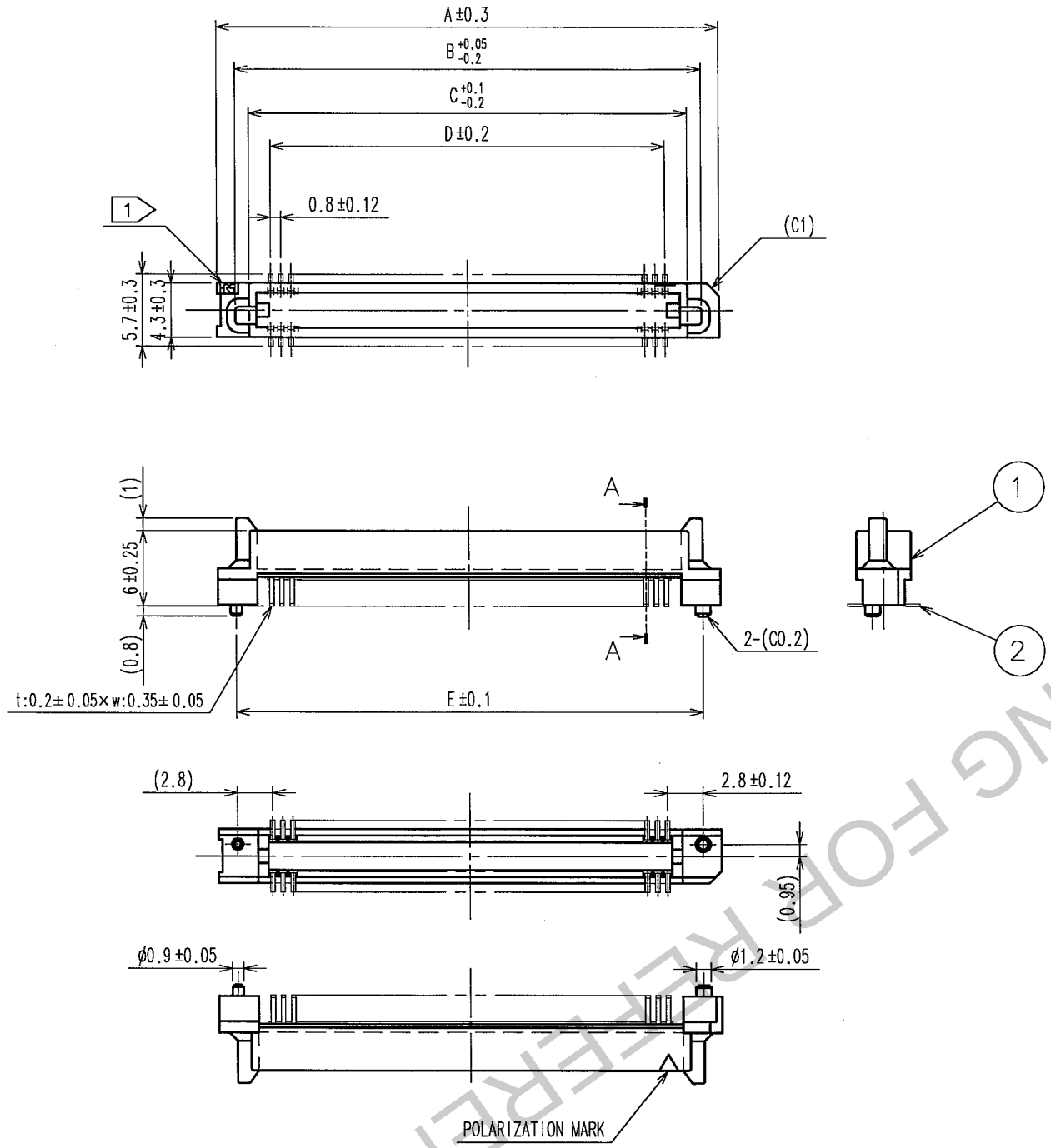

A-A(10:1)

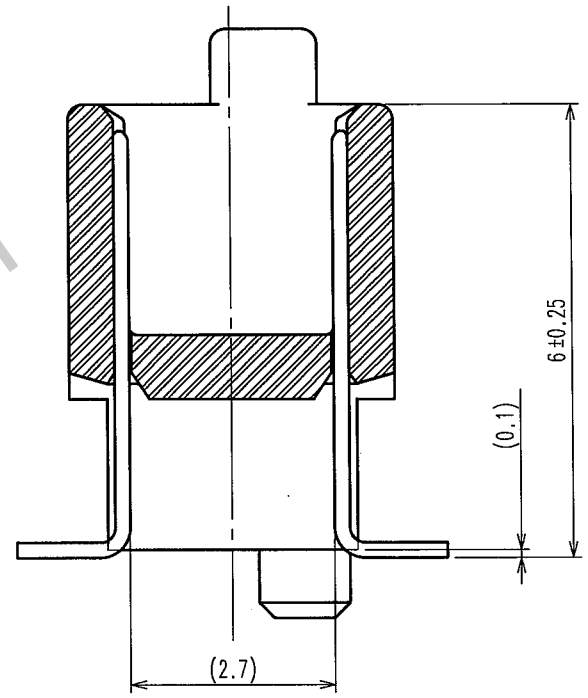

DIMENSION TABLE OF CONNECTOR AND P.C.B. LAND PATTERN.

PART No.	CODE No.	5	A	B	C	D	E
FX6- 20P-0.8SV2(71)	CL576-0041-8-71	20	15.8	12.9	10.7	7.2	12.8
FX6- 40P-0.8SV2(71)	CL576-0043-3-71	40	23.8	20.9	18.7	15.2	20.8
FX6- 50P-0.8SV2(71)	CL576-0044-6-71	50	27.8	24.9	22.7	19.2	24.8
FX6- 60P-0.8SV2(71)	CL576-0045-9-71	60	31.8	28.9	26.7	23.2	28.8
FX6- 80P-0.8SV2(71)	CL576-0047-4-71	80	39.8	36.9	34.7	31.2	36.8
FX6-100P-0.8SV2(71)	CL576-0048-7-71	100	47.8	44.9	42.7	39.2	44.8

NOTE 1 HRS MARK SHOULD BE OPTIONAL.
2. LEAD CO-PLANARITY SHALL BE 0.1mm MAX.
3. FOR MODIFICATION,ETC.,PREVENTIVE HOLE FOR SINK MARK MAY BE ADDED ACCORDING TO CIRCUMSTANCES.
4. THE DIMENSIONS IN PARENTHESES ARE FOR REFERENCE.
5 NUMBER OF CONTACTS.

RECOMMENDED LAND PATTERN DIMENSION OF P.C.B. (MOUNTING SIDE)

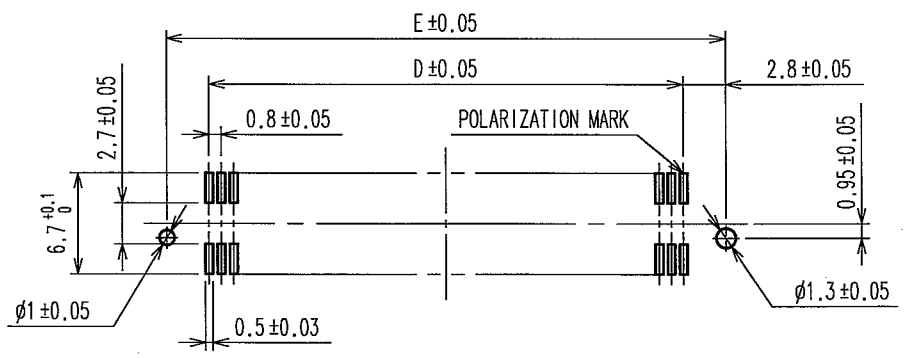

NO.	MATERIAL	FINISH, REMARKS	NO.	MATERIAL	FINISH, REMARKS
1	POLYPHENYLENE SULFIDE	LIGHT BROWN (UL94V-0)	2	PHOSPHOR BRONZE	CONTACT AREA:GOLD 0.1μm min. LEAD AREA:TIN-PLATING 1μm min. UNDER PLATING:NICKEL 1μm min.

CODE NO.(OLD)	DRAWN	DESIGNED	CHECKED	APPROVED	RELEASED
CL	A.SUZUKAWA 05.07.13	H.Doi '05.07.14	H.Ozawa '05.07.14	H.Okawa '05.07.15	. .

SCALE FREE	DRAWING NO. EDC3-152945-25	PART NO. FX6-**P-0.8SV2(71)
UNITS mm	HRS HIROSE ELECTRIC CO., LTD	CODE NO. CL576 1/1

TO
PCK

HRS DRAWING FOR REFERENCE