Oct.1.2018 Copyright 2018 HIROSE ELECTRIC CO., LTD. All Rights Reserved.

In case that the application demands a high level of reliability, such as automotive, please contact a company representative for further information.

	COUNT	DESCRIPTION OF REVISIONS	BY	CHKD	DATE		COUNT	DESCRIPTION OF REVISIONS	BY	CHKD	DATE
△					. .	△					. .
△					. .	△					. .
△					. .	△					. .

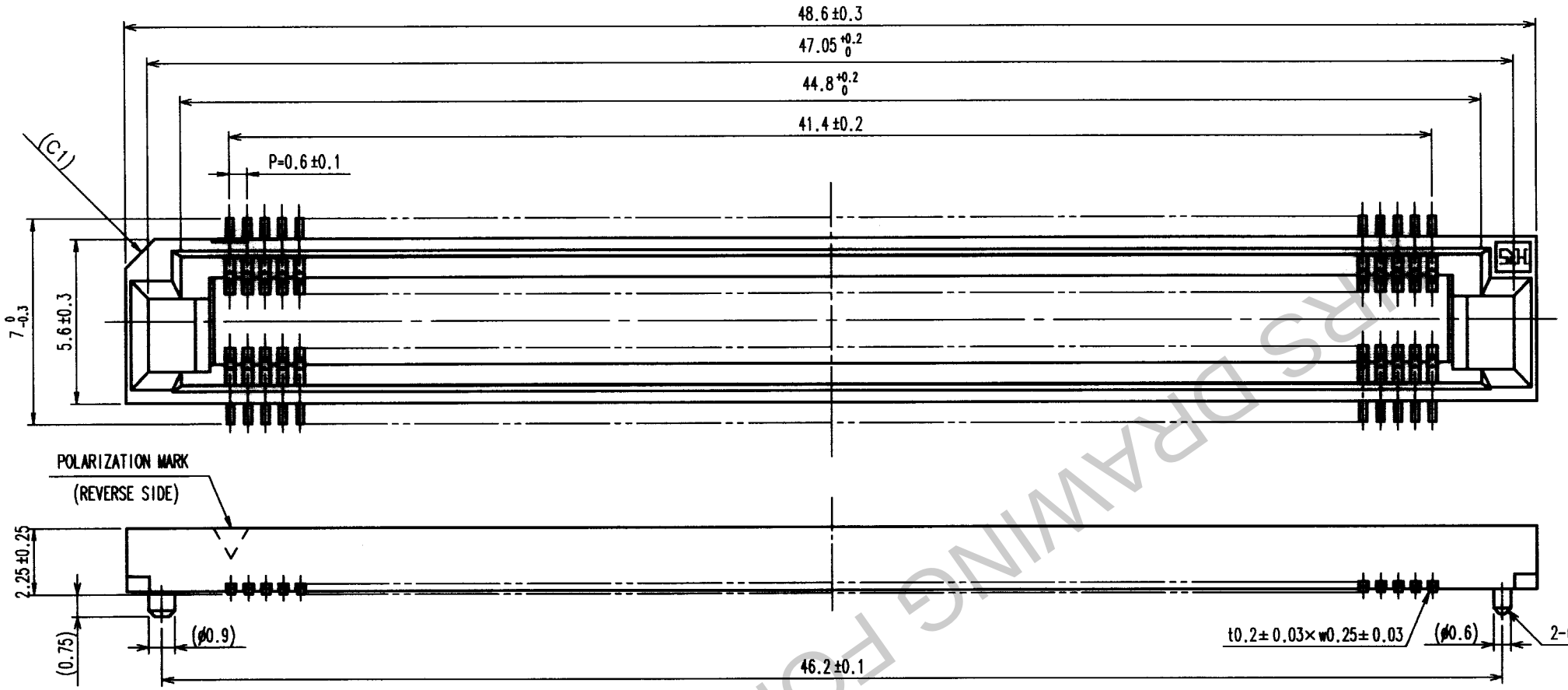

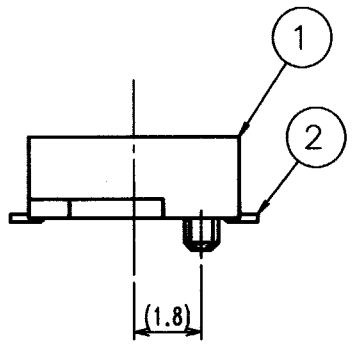

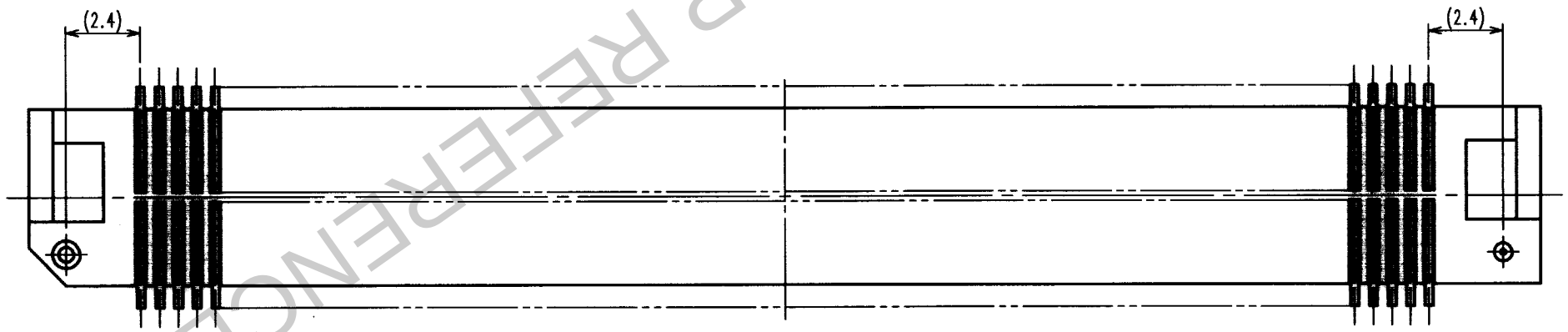

NOTE
1 LEAD CO-PLANARITY SHALL BE 0.1 MAX.
2 EMBOSS CARRIER TAPE PACKAGING SHALL BE APPLIED FOR THIS PRODUCT. SEE SHEET 2/2 FOR DETAILS.
3 THIS PRODUCT HAS TAPE FOR VACUUM PICKUP. SEE NEXT PAGE FOR DETAIL OF STICKING POSITION,ETC
4 FOR MODIFICATION,ETC.,PREVENTIVE HOLE FOR SINK MARK MAY BE ADDED DEPENDS ON CIRCUMSTANCES.

RECOMMENDED LAND PATTERN DIMENSION OF PCB (MOUNTING SIDE)
(2:1)

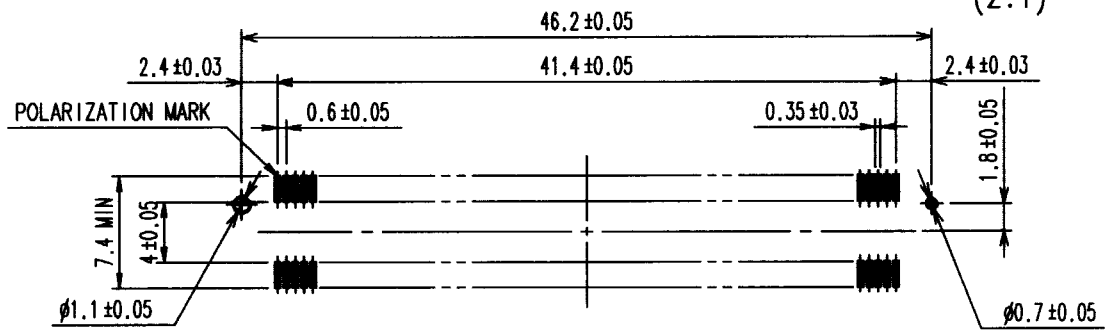

NO.	MATERIAL	FINISH, REMARKS	NO.	MATERIAL	FINISH, REMARKS
1	PPS	LIGHT BROWN (UL94V-0)	2	PHOSPHOR BRONZE	CONTACT AREA:GOLD(0.1μm) OVER NICKEL THE OTHER AREA:GOLD(FLASH) OVER NICKEL

CODE NO.(OLD)	DRAWN	DESIGNED	CHECKED	APPROVED	RELEASED
	M.Nagata 01-04-06	M.Nagata 01-04-06	H.Okawa 01-04-06	Y.Yokimura 01-04-06	. .

SCALE 5 : 1
UNITS mm

DRAWING NO. EDC3-150678-02

HRS HIROSE ELECTRIC CO., LTD

PART NO. FX8-140S-SV(23)

CODE NO. CL578-0207-1-23

1/2

TO
PCK

FOR REFERENCE ONLY DRAWING

Oct.1.2018 Copyright 2018 HIROSE ELECTRIC CO., LTD. All Rights Reserved.
In case that the application demands a high level of reliability, such as automotive, please contact a company representative for further information.

COUNT	DESCRIPTION OF REVISIONS	BY	CHKD	DATE	COUNT	DESCRIPTION OF REVISIONS	BY	CHKD	DATE
△				. .	△				. .
△				. .	△				. .
△				. .	△				. .

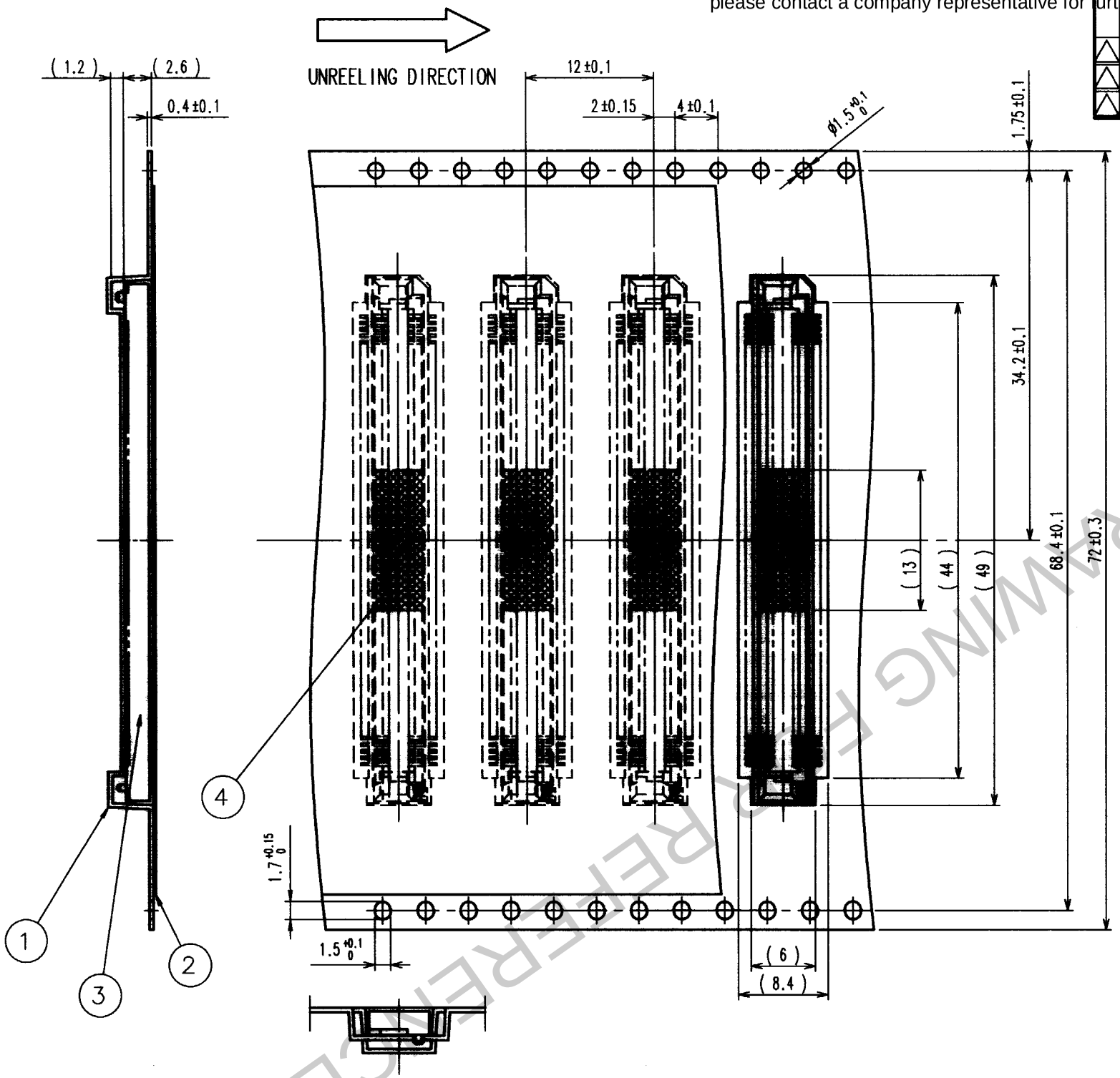

REELED DIMENSION (FREE)

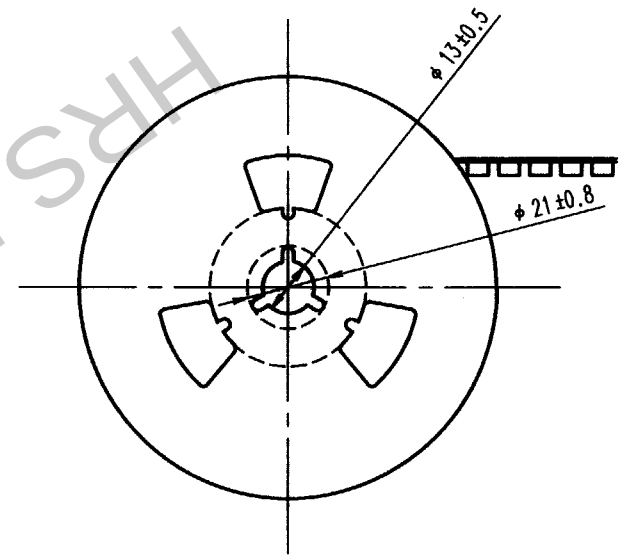

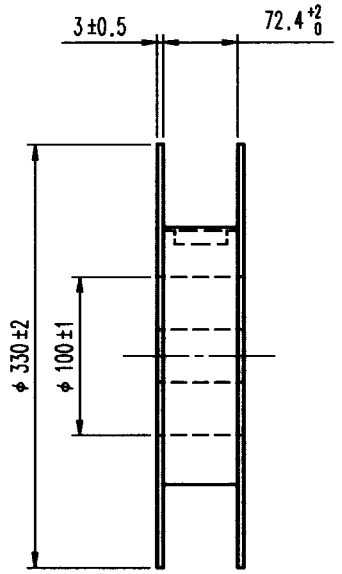

NOTE 1 1REEL : 1000 CONNECTORS.

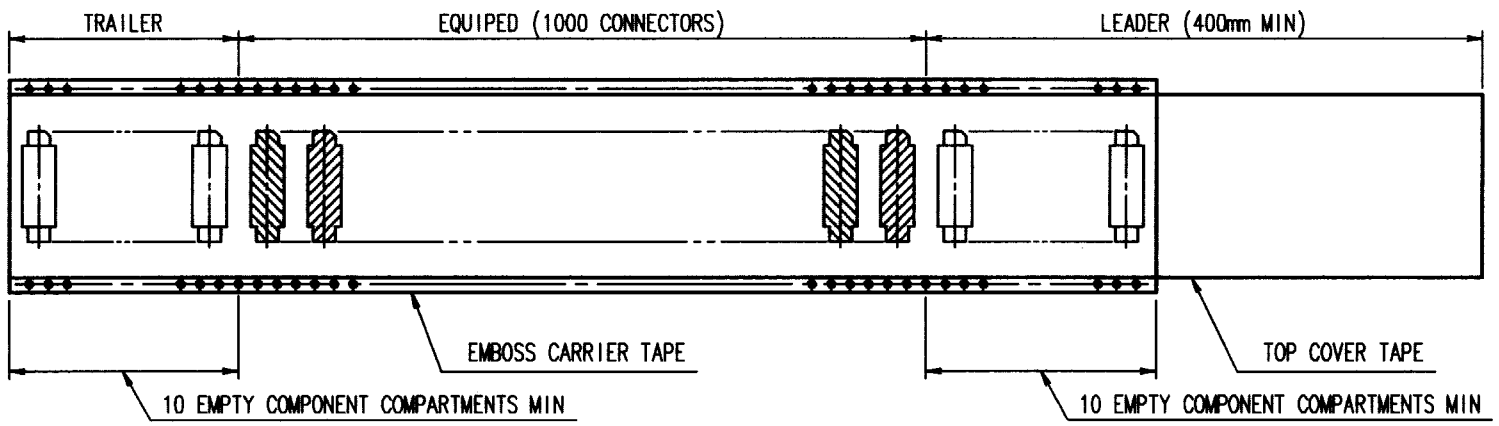

NO.	MATERIAL	FINISH, REMARKS	NO.	MATERIAL	FINISH, REMARKS
2	POLYESTER	TOP COVER TAPE	4	POLYMIDE	(TAPE FOR VACUUM PICKUP)
1	POLYSTYRENE	EMBOSS CARRIER TAPE	3	(CONNECTOR)	

CODE NO.(OLD)	DRAWN	DESIGNED	CHECKED	APPROVED	RELEASED
	M.Nagata 01-04-06	M.Nagata 01-04-06	H.Okawa 01-04-06	J.Fukimura 01-04-06	. .

SCALE 2 : 1	DRAWING NO. EDC3-150678-02	PART NO. FX8-140S-SV(23)
UNITS mm	HRS HIROSE ELECTRIC CO., LTD	CODE NO. CL578-0207-1-23

2/

TO
PCK

HRS DRAWING REFERENCE