Oct.1.2018 Copyright 2018 HIROSE ELECTRIC CO., LTD. All Rights Reserved.
In case that the application demands a high level of reliability, such as automotive,
please contact a company representative for further information.

COUNT	DESCRIPTION OF REVISIONS	BY	CHKD	DATE	COUNT	DESCRIPTION OF REVISIONS	BY	CHKD	DATE
△				. .	△				. .
△				. .	△				. .
△				. .	△				. .

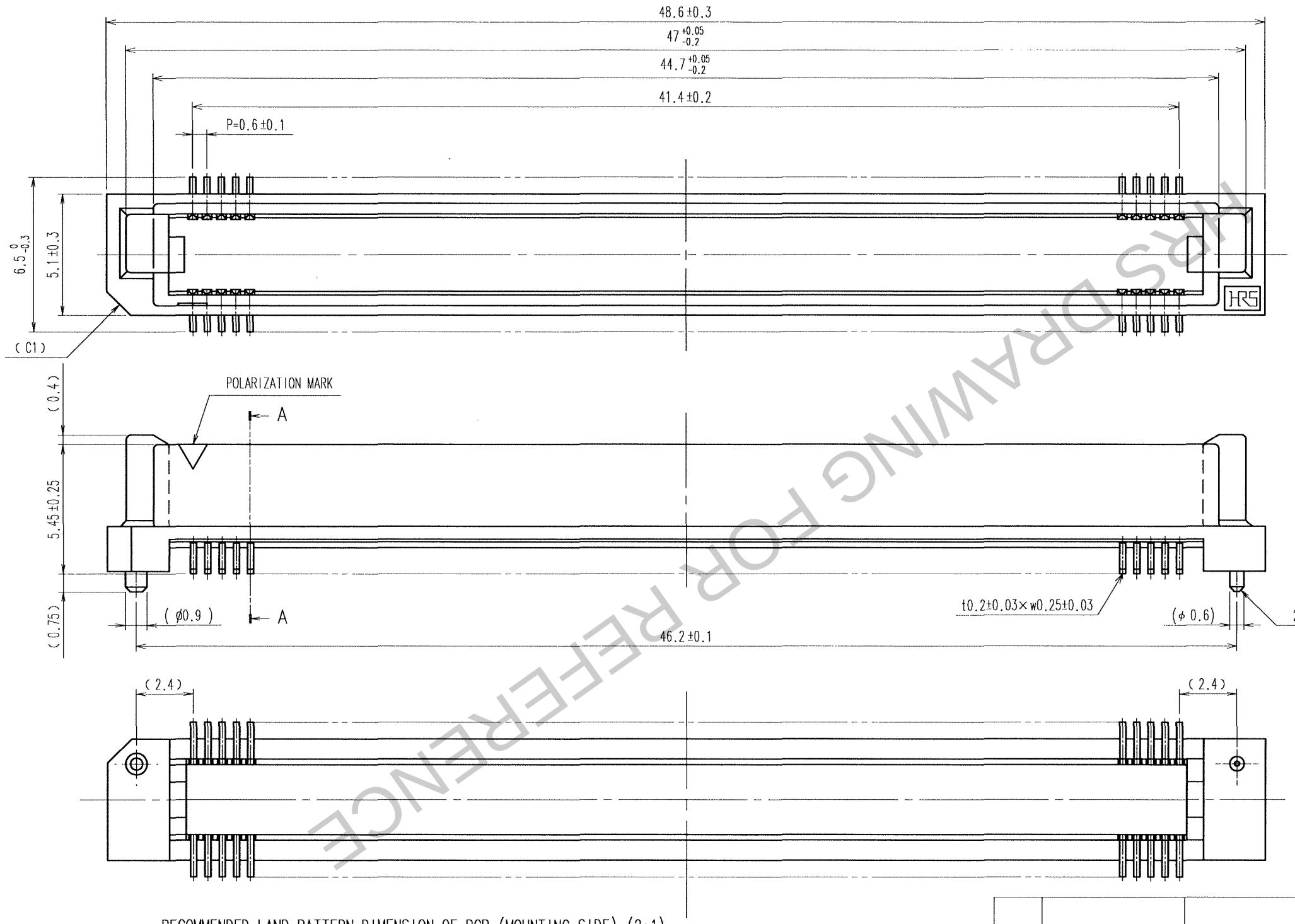

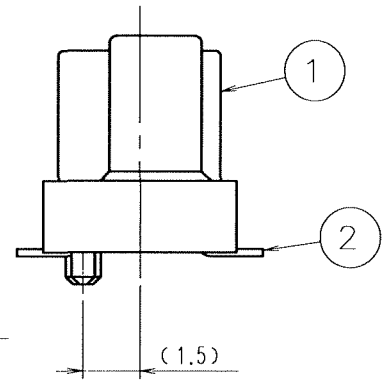

A – A

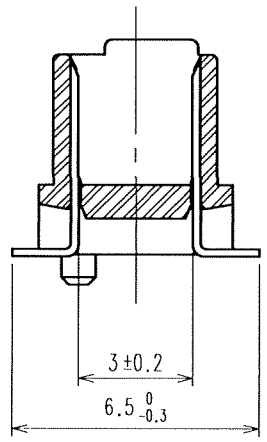

NOTE 1. LEAD CO-PLANARITY SHALL BE 0.1mm MAX.
2. FOR MODIFICATION,ETC.,PREVENTIVE HOLE FOR SINK MARK MAY BE ADDED ACCORDING TO CIRCUMSTANCES.
3. THE DIMENSIONS IN PARENTHESES ARE FOR REFERENCE.

RECOMMENDED LAND PATTERN DIMENSION OF PCB (MOUNTING SIDE) (2:1)

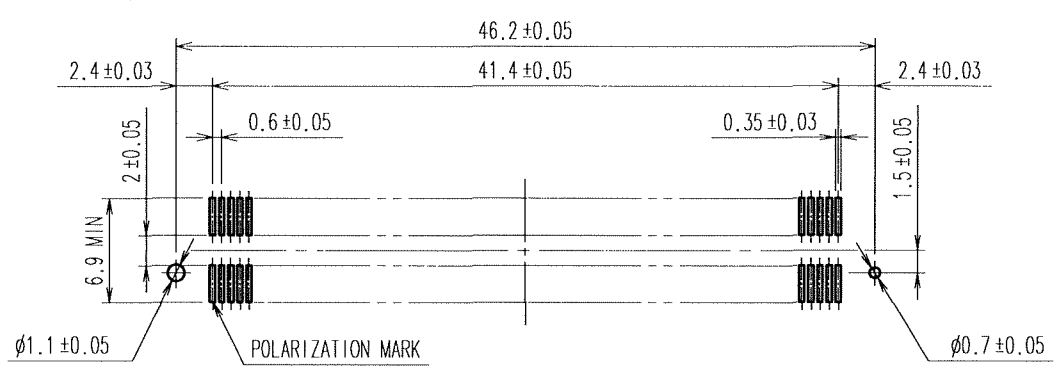

NO.	MATERIAL	FINISH, REMARKS	NO.	MATERIAL	FINISH, REMARKS
1	PPS	LIGHT BROWN (UL94V-0)	2	PHOSPHOR BRONZE	CONTACT AREA:GOLD 0.1μm min. LEAD AREA:TIN-PLATING 1μm min. UNDER PLATING:NICKEL 1μm min.

CODE NO.(OLD)	DRAWN	DESIGNED	CHECKED	APPROVED	RELEASED
CL	K.NAKAMURA 05.12.16	K.NAKAMURA 05.12.16	H.Ogawa '05.12.16	H.Okawa '05.12.16	

SCALE 5 : 1
UNITS mm

DRAWING NO. EDC3-150835-25

HRS HIROSE ELECTRIC CO.,LTD.

PART NO. FX8C-140P-SV1(71)

CODE NO. CL578-0527-2-71

1/1

TO
PCK

HRS DRAWING FOR REFERENCE

FORM NO.229