Oct.1.2018 Copyright 2018 HIROSE ELECTRIC CO., LTD. All Rights Reserved.
In case that the application demands a high level of reliability, such as automotive,
please contact a company representative for further information.

COUNT	DESCRIPTION OF REVISIONS	BY	CHKD	DATE	COUNT	DESCRIPTION OF REVISIONS	BY	CHKD	DATE
				. .					. .
				. .					. .
				. .					. .

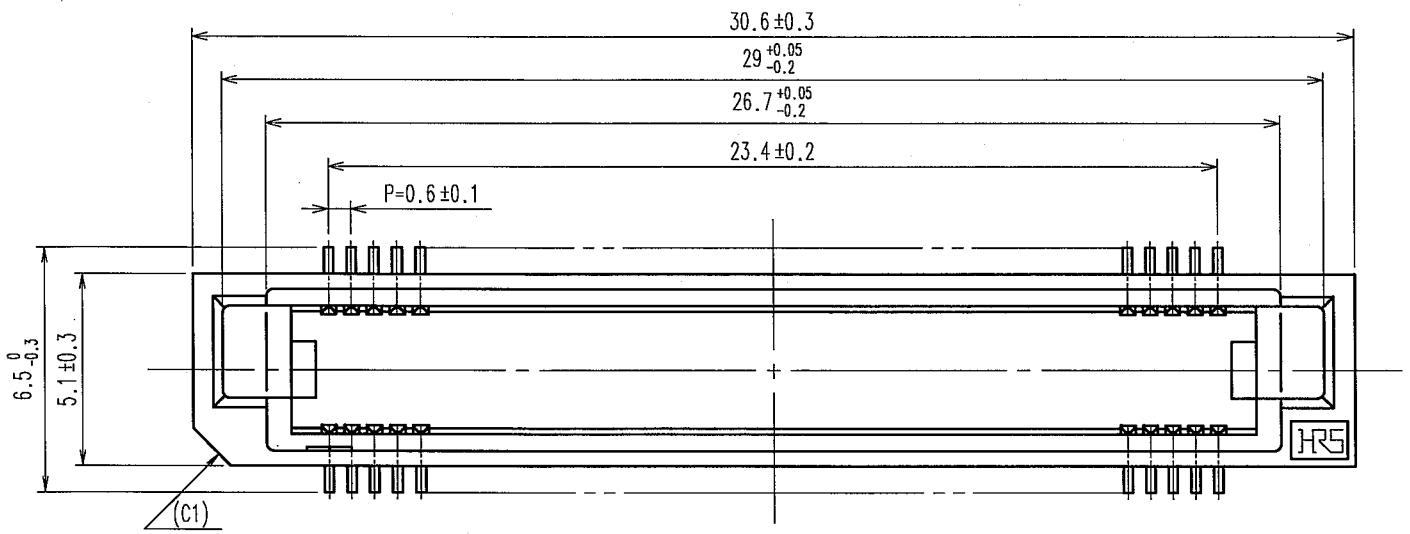

RECOMMENDED LAND PATTERN DIMENSION OF PCB (MOUNTING SIDE) (2:1)

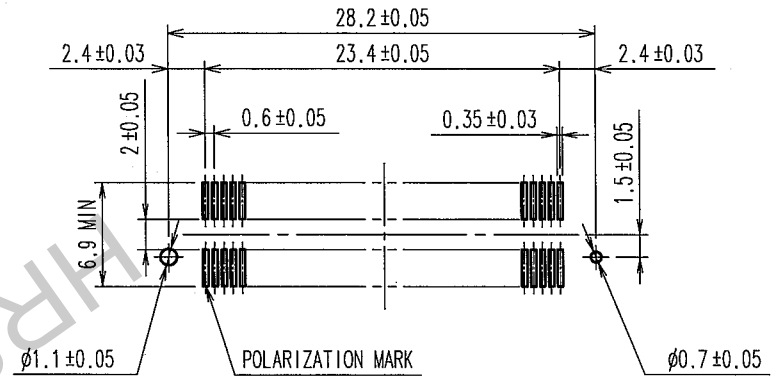

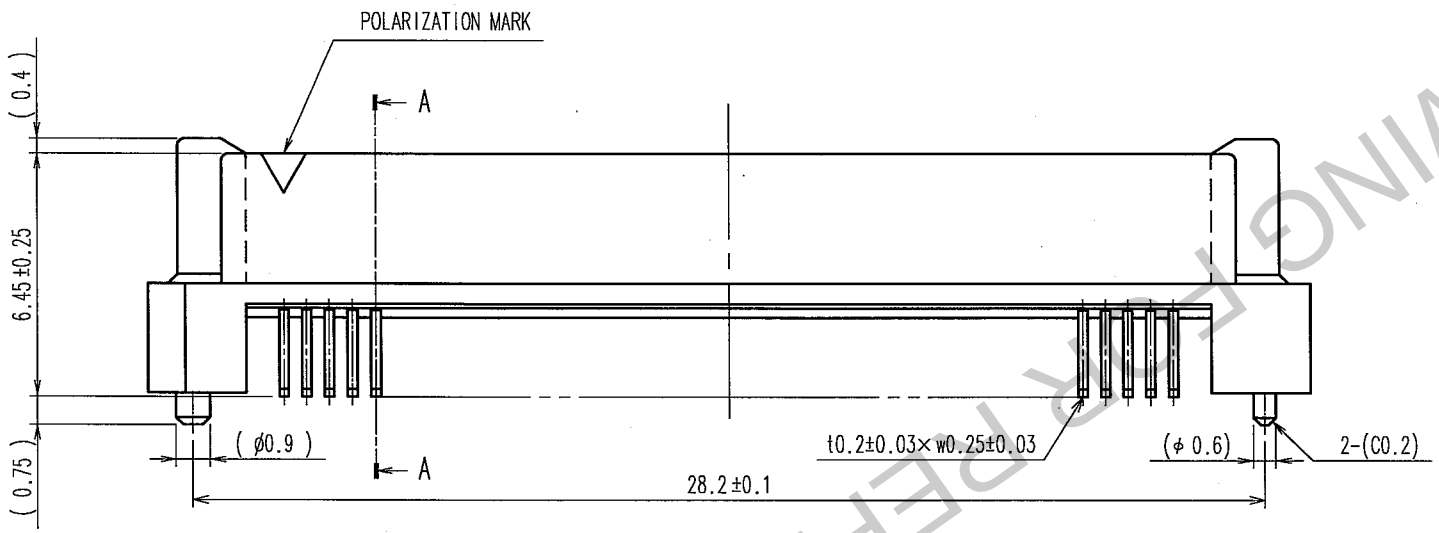

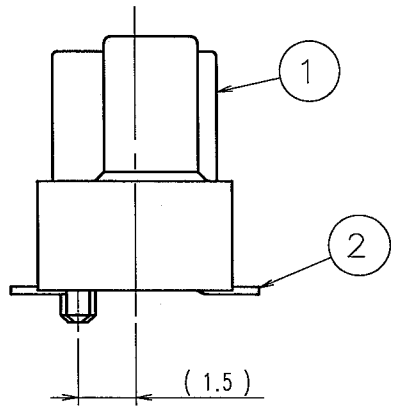

A–A

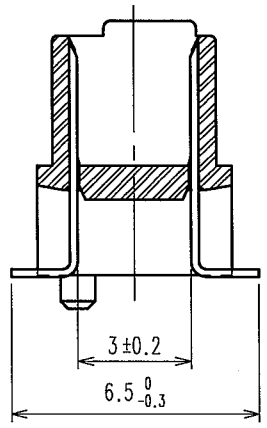

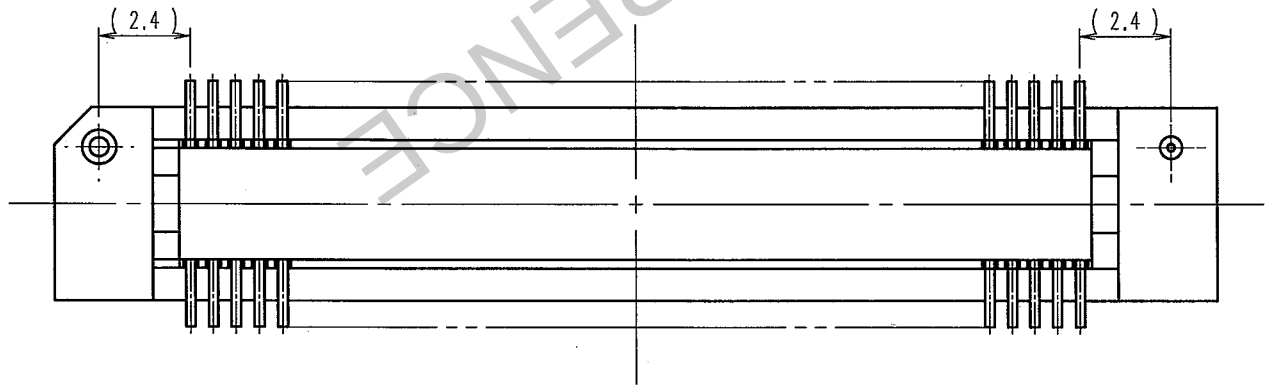

NOTE. 1.LEAD CO-PLANARITY SHALL BE 0.1mm MAX.
2.TUBE PACKAGING SHALL BE APPLIED FOR THIS PRODUCT.
SEE NEXT PAGE FOR DETAILS.
3.FOR MODIFICATION,ETC.,PREVENTIVE HOLE FOR SINK MARK MAY BE ADDED ACCORDING TO CIRCUMSTANCES.
4.THE DIMENSIONS IN PARENTHESES ARE FOR REFERENCE.

NO.	MATERIAL	FINISH, REMARKS	NO.	MATERIAL	FINISH, REMARKS
1	PPS	LIGHT BROWN (UL94V-0)	2	PHOSPHOR BRONZE	CONTACT AREA:GOLD 0.1μm min. LEAD AREA:TIN-PLATING 1μm min. UNDER PLATING:NICKEL 1μm min.

CODE NO.(OLD)	DRAWN	DESIGNED	CHECKED	APPROVED	RELEASED
CL	K.NAKAMURA 05.12.09	K.NAKAMURA 05.12.09	H.Ozawa '05.12.12	H.Okawa '05.12.12	

SCALE 5 : 1
UNITS mm

DRAWING NO. EDC3-150842-21

PART NO. FX8C-80P-SV2(91)

HRS HIROSE ELECTRIC CO.,LTD.

CODE NO. CL578-0543-9-91

1/2

TO
PCK

FORM NO.229

HRS DRAWING FOR REFERENCE

Oct.1.2018 Copyright 2018 HIROSE ELECTRIC CO., LTD. All Rights Reserved.
In case that the application demands a high level of reliability, such as automotive,
please contact a company representative for further information.

COUNT	DESCRIPTION OF REVISIONS	BY	CHKD	DATE	COUNT	DESCRIPTION OF REVISIONS	BY	CHKD	DATE
				. .					. .
				. .					. .
				. .					. .

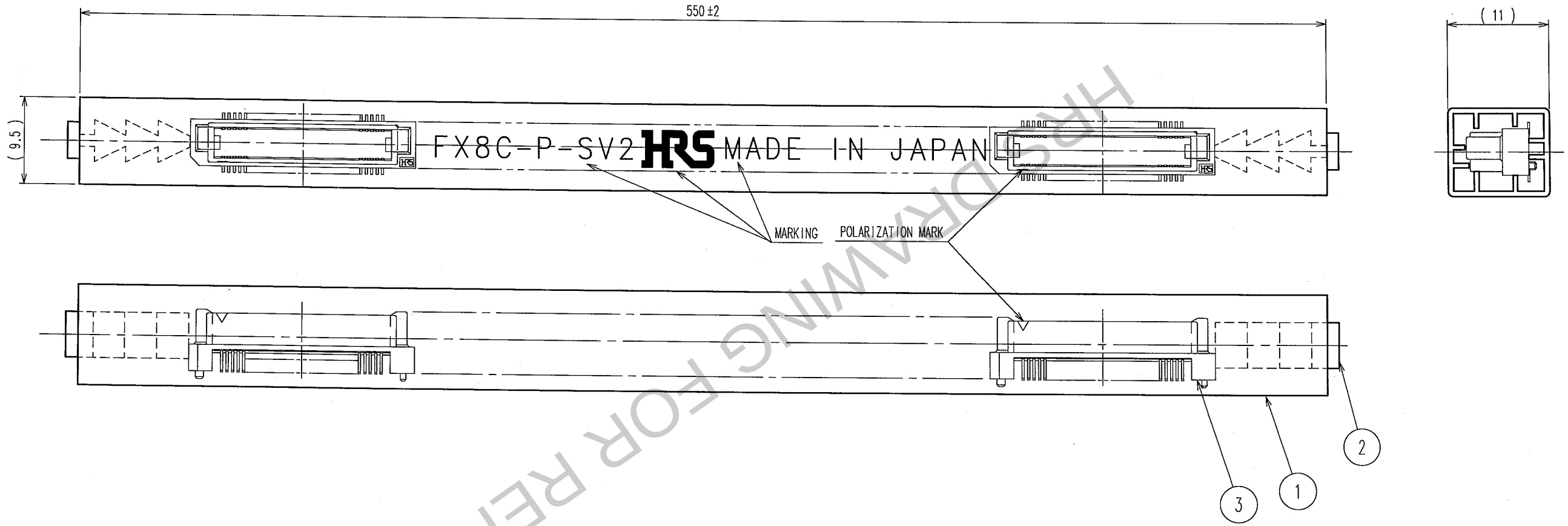

HRS DRAWING FOR REFERENCE

NOTE 1. 1 TUBE : 17 CONNECTORS.
2. THE DIMENSIONS IN PARENTHESES ARE FOR REFERENCE.

NO.	MATERIAL	FINISH, REMARKS
2	POLYVINYL CHLORIDE	(STOPPER)
3		(CONNECTOR)
1	POLYVINYL CHLORIDE	(TUBE)

CODE NO.(OLD)	DRAWN	DESIGNED	CHECKED	APPROVED	RELEASED
CL	K.NAKAMURA 05.12.09	K.NAKAMURA 05.12.09	H.Ozawa '05.12.12	H.Okawa '05.12.12	. .

SCALE FREE	DRAWING NO. EDC3-150842-21	PART NO. FX8C-80P-SV2(91)
UNITS mm	HRS HIROSE ELECTRIC CO., LTD	CODE NO. CL578-0543-9-91 2/

TO
PCK