Oct.1.2018 Copyright 2018 HIROSE ELECTRIC CO., LTD. All Rights Reserved.
In case that the application demands a high level of reliability, such as automotive,
please contact a company representative for further information.

COUNT	DESCRIPTION OF REVISIONS	BY	CHKD	DATE	COUNT	DESCRIPTION OF REVISIONS	BY	CHKD	DATE
△				. .	△				. .
△				. .	△				. .
△				. .	△				. .

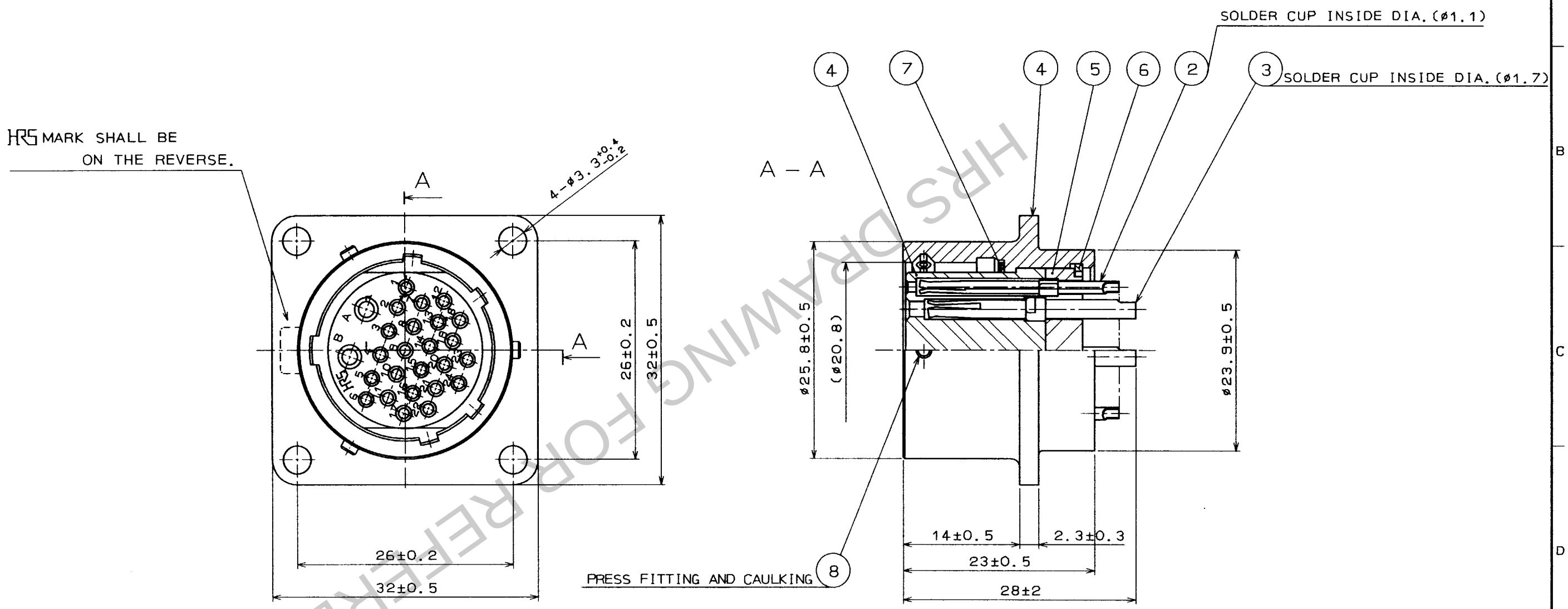

HRS DRAWING FOR REFERENCE

NOTE 1 AN EXAMPLE OF SOLDER CUP DIRECTON REF. NO. ② AND ③ IS SHOWN.

NO.	MATERIAL	FINISH , REMARKS	NO.	MATERIAL	FINISH , REMARKS
4	PHENOL-FORMALDEHYDE	(BLACK) UL94V-0	8	STAINLESS STEEL	
3	BRASS	SILVER PLATING	7	STAINLESS STEEL	
2	BRASS	SILVER PLATING	6	PHOSPHOR BRONZEL	NICKEL PLATING
1	ALUMINUM ALLOY	MATTE FINISH NICKEL PLATED	5	PHENOL-FORMALDEHYDE	(BLACK) UL94V-0

CODE NO. (OLD)	DRAWN	DESIGNED	CHECKED	APPROVED	RELEASED
	H.Kishi 97.7.14	H.Kishi 97.7.14	. .	M.Yoshida 97.7.16	

SCALE 2 : 1	DRAWING NO. EDC3-020923	PART NO. JRC21BRA-26S
UNITS mm	HRS HIROSE ELECTRIC CO., LTD.	CODE NO. CL114-0270-6 1/1

TO
R

FORM No. 229