Oct.1.2018 Copyright 2018 HIROSE ELECTRIC CO., LTD. All Rights Reserved.

In case that the application demands a high level of reliability, such as automotive, please contact a company representative for further information.

COUNT	DESCRIPTION OF REVISIONS	BY	CHKD	DATE	COUNT	DESCRIPTION OF REVISIONS	BY	CHKD	DATE
				. .					. .
				. .					. .
				. .					. .

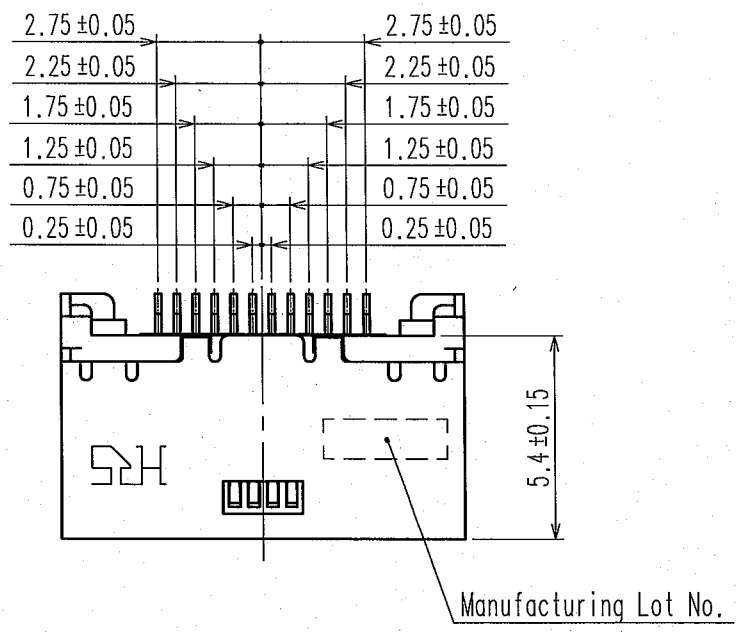

Mated(2:1)

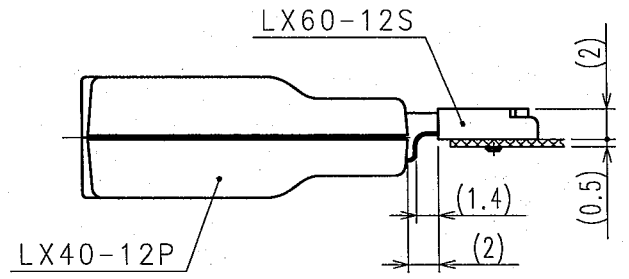

Dimensions SMT lead(20:1)

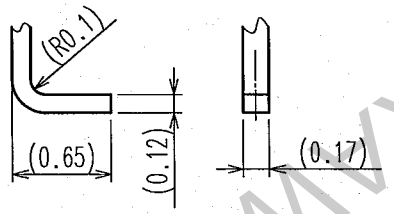

Recommended PC board pattern

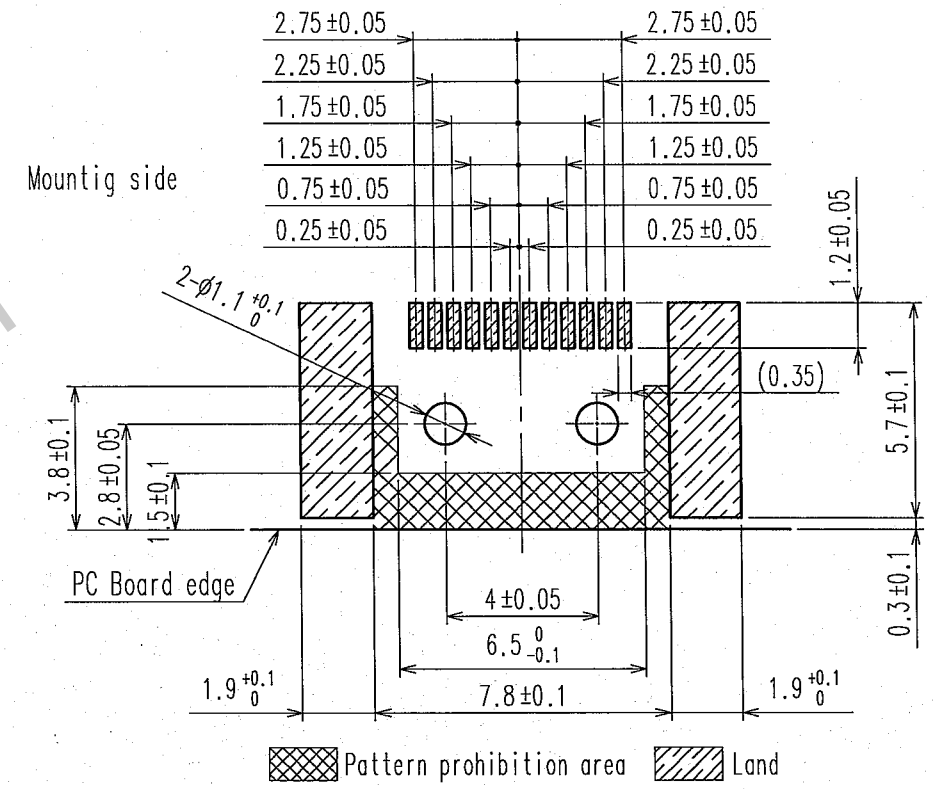

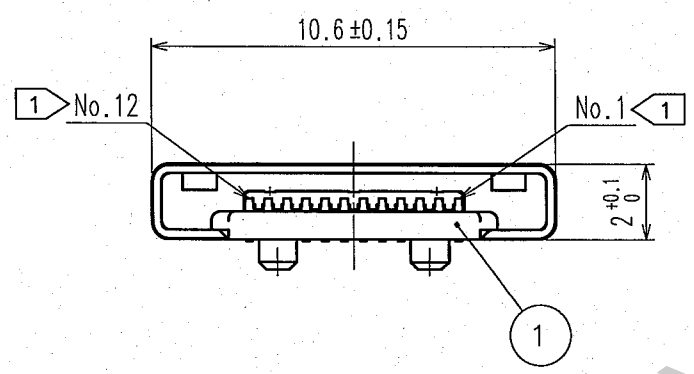

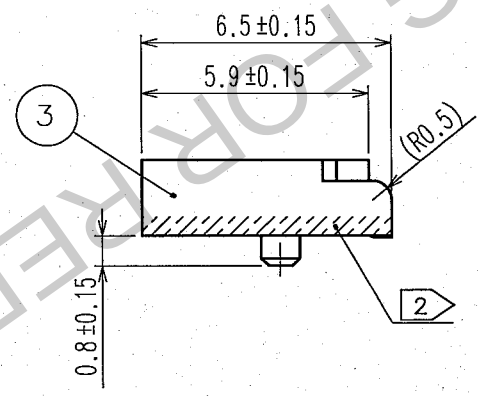

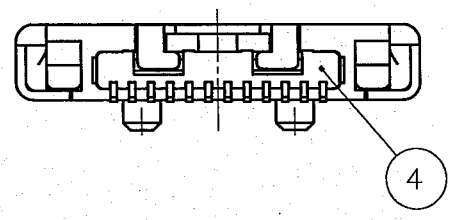

Notes) 1 No.1 and 12 pin are dedicated to sequence contact.

2 shows selective gold flush plated area.

3. SMT contact coplanarity should be less than 0.1mm within the range from -0.1mm to +0.05mm.

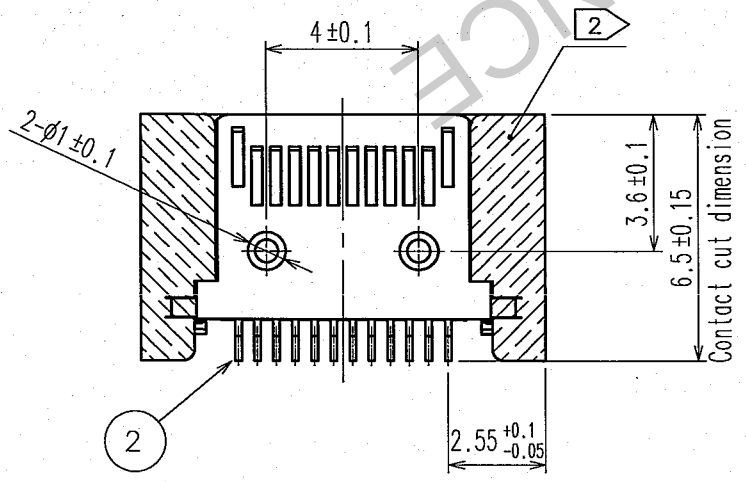

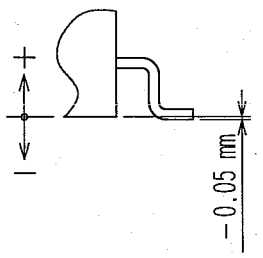

NO.	MATERIAL	FINISH, REMARKS	NO.	MATERIAL	FINISH, REMARKS
2	Copper alloy	Contact: Selective gold plating (0.3μm) Lead: Selective gold flush plating	4	PA9T(9TNylon)	Color:black UL94V-0
1	PA9T(9TNylon)	Color:black UL94V-0	3	Stainless steel	Selective gold flush plating

CODE NO.(OLD)	DRAWN	DESIGNED	CHECKED	APPROVED	RELEASED
	S.Shimizu '05.12.28	S.Shimizu '05.12.28	Matsuyaki 05.12.28	Matsuyaki 05.12.28	. .

SCALE 5 : 1	DRAWING NO. EDC3-125470	PART NO. LX60-12S
UNITS mm	HRS HIROSE ELECTRIC CO., LTD	CODE NO. CL245-0018-3 1/2

TO
Q

HRS DRAWING FOR REFERENCE

FORM NO.229

Q1

Oct.1.2018 Copyright 2018 HIROSE ELECTRIC CO., LTD. All Rights Reserved.
In case that the application demands a high level of reliability, such as automotive, please contact a company representative for further information.

COUNT	DESCRIPTION OF REVISIONS	BY	CHKD	DATE	COUNT	DESCRIPTION OF REVISIONS	BY	CHKD	DATE

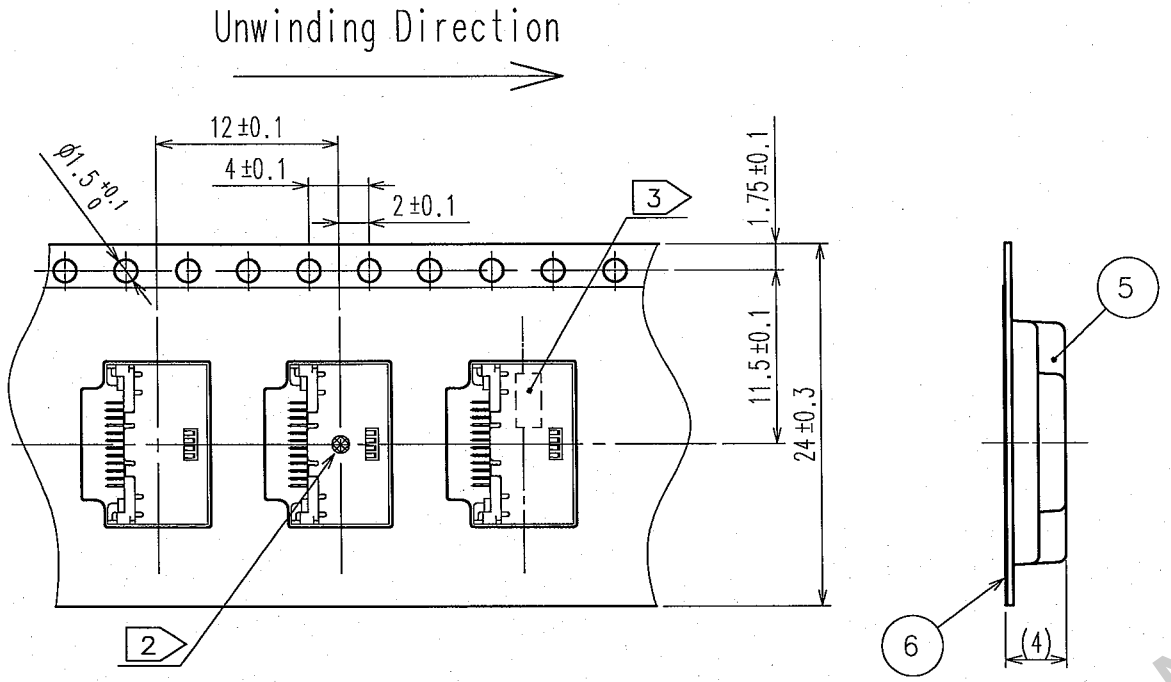

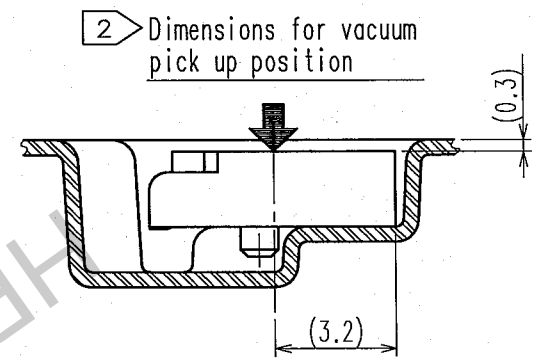

notes) 1 . Packing type: Tape and reel. 2000 pcs per reel.

2 Indication is the approximate position to vacuum pick up.

3 Mark the manufacturing lot number at the indicated position
Composition of lot number is as shown below.

<Ex.> 6 K A 1 → Lot No. for the conponent manufactured at line No.1 on november 10, 2006.
① ② ③ ④

Note) ④ is indicated only when there are multiple manufacturing lines.

①		②		③						④
Year	Print	Month	Print	Date	Print	Date	Print	Date	Print	Line No.
'06	6	Jan.	A	The first	1	The 11th	B	The 21th	M	1
'07	7	Feb.	B	The second	2	The 12th	C	The 22th	N	2
'08	8	Mar.	C	The third	3	The 13th	D	The 23th	P	•
•	•	Apr.	D	The fourth	4	The 14th	E	The 24th	Q	•
•	•	May	E	The fifth	5	The 15th	F	The 25th	R	•
		Jun	F	The sixth	6	The 16th	G	The 26th	S	•
		Jul	G	The seventh	7	The 17th	H	The 27th	T	
		Aug.	H	The eighth	8	The 18th	J	The 28th	U	
		Sep.	I	The ninth	9	The 19th	K	The 29th	V	
		Oct.	J	The tenth	A	The 20th	L	The 30th	W	
		Nov.	K					The 31th	X	
		Dec.	L							

Plastic reel packaging dimensions
(Free)

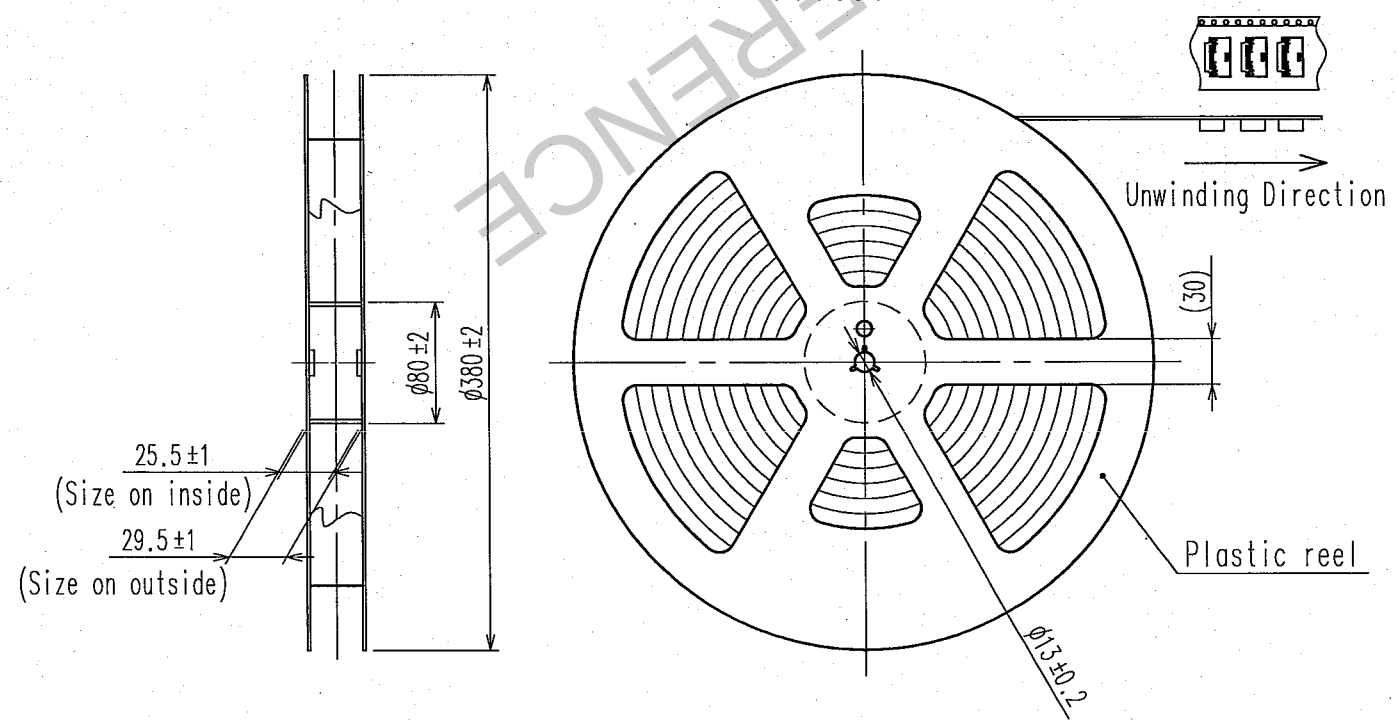

NO.	MATERIAL	FINISH, REMARKS	NO.	MATERIAL	FINISH, REMARKS
5	PS	Embossed carrier tape	6	PS	Top cover tape

CODE NO.(OLD)	DRAWN	DESIGNED	CHECKED	APPROVED	RELEASED

SCALE 2 : 1
UNITS mm

DRAWING NO. EDC3-125470

HIROSE ELECTRIC CO., LTD

PART NO. LX60-12S

CODE NO. CL245-0018-3

2/2

FORM NO.229

TO
Q

FOR REFERENCE
HRS DRAWING FOR