THIS DRAWING IS UNPUBLISHED. RELEASED FOR PUBLICATION -
© COPYRIGHT copyright_date ALL RIGHTS RESERVED.

REVISIONS

P	LTR	DESCRIPTION	DATE	DWN	APVD
	E	REVISED EC 0G3B-0155-05	23MAY2005	SW	SH
	F	ADDED -3, ECO-06-013943	22JUN2006	SW	SH
	G	REVISED PER ECR-16-016548	27FEB2017	RS	MZ

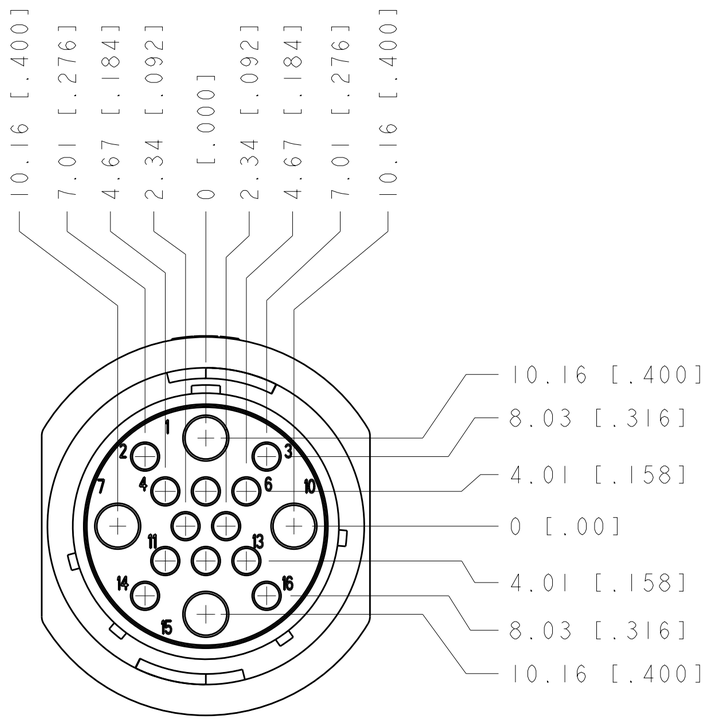

FREE-HANGING VERSION

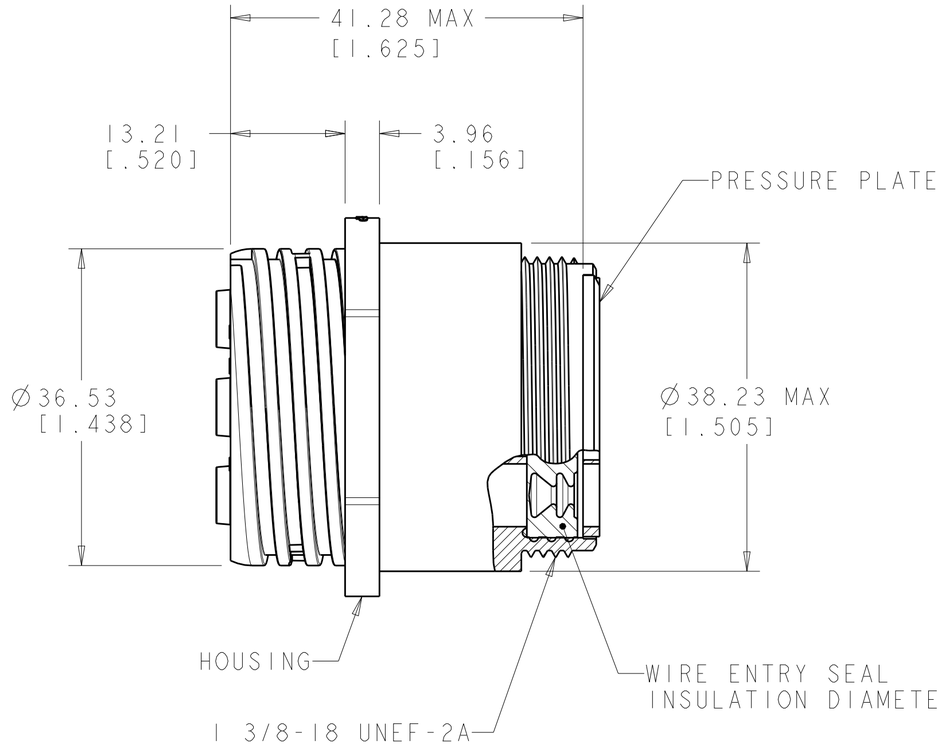

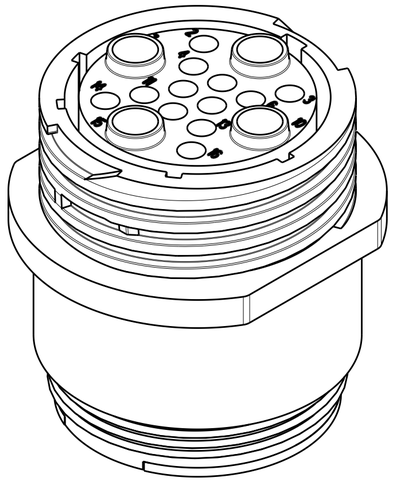

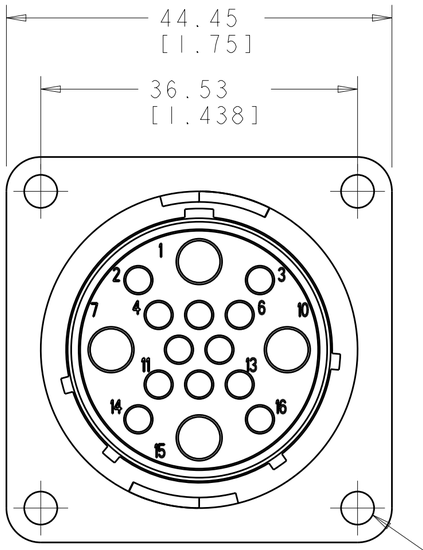

THREADED INSERT
QTY: 4, SEE TABLE

SQUARE FLANGE VERSION

1. HOUSING & PRESSURE PLATE: NYLON, BLACK.
   WIRE ENTRY SEAL: ELASTOMER, RED-IRON OXIDE.
   PERIPHERAL SEAL: POLYESTER, BLACK.

2. CONNECTOR WILL ACCEPT (12) MULTIMATE SOCKET AND (4) POWER SOCKET CONTACTS.

OBSOLETE	.095-.205	NO	SQUARE FLANGE	796330-3
OBSOLETE	.150-.260	YES	SQUARE FLANGE	796330-2
	.095-.205	NO	FREE-HANGING	796330-1
	INSULATION DIAMETER	THREADED INSERT	HOUSING VERSION	PART NUMBER

THIS DRAWING IS A CONTROLLED DOCUMENT.

DIMENSIONS: mm[INCHES]

TOLERANCES UNLESS OTHERWISE SPECIFIED:
0 PLC ±-
1 PLC ±-
2 PLC ±0.02
3 PLC ±-
4 PLC ±-
ANGLES ±-
FINISH -

MATERIAL - 1

DWN S.WELDON 13DEC1999
CHK J.ENGLE 13DEC1999
APVD J.ENGLE 13DEC1999
PRODUCT SPEC 108-1579
APPLICATION SPEC -
WEIGHT -

TE Connectivity

NAME RECEPTACLE ASSY, SERIES 6, REVERSE SEX, SIZE 23-16 CIRCULAR PLASTIC CONNECTOR

SIZE A2 | CAGE CODE 00779 | DRAWING NO C-796330 | RESTRICTED TO -

CUSTOMER DRAWING | SCALE 2:1 | SHEET 1 OF 1 | REV G

1471-9 (3/13)