THIS DRAWING IS UNPUBLISHED. RELEASED FOR PUBLICATION -,- .
© COPYRIGHT - By - ALL RIGHTS RESERVED.

LOC	DIST
AF	50

REVISIONS

P	LTR	DESCRIPTION	DATE	DWN	APVD
	E	REVISED PER ECR-13-011489	12DEC2013	KH	PD

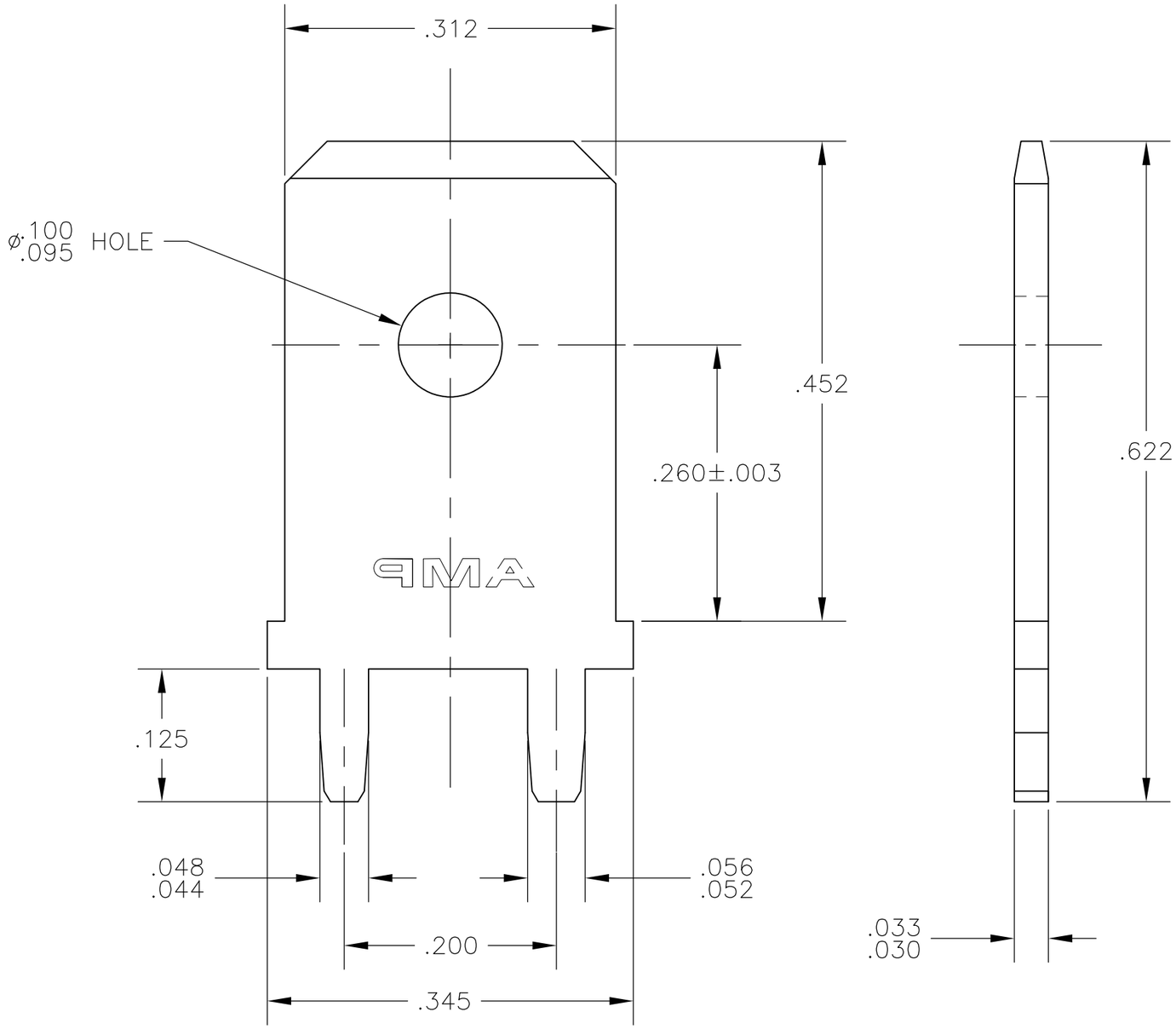

1 SUPPLIED IN LOOSE PIECE

2 .000150 MIN TIN OVER .000100 MIN THK COPPER.

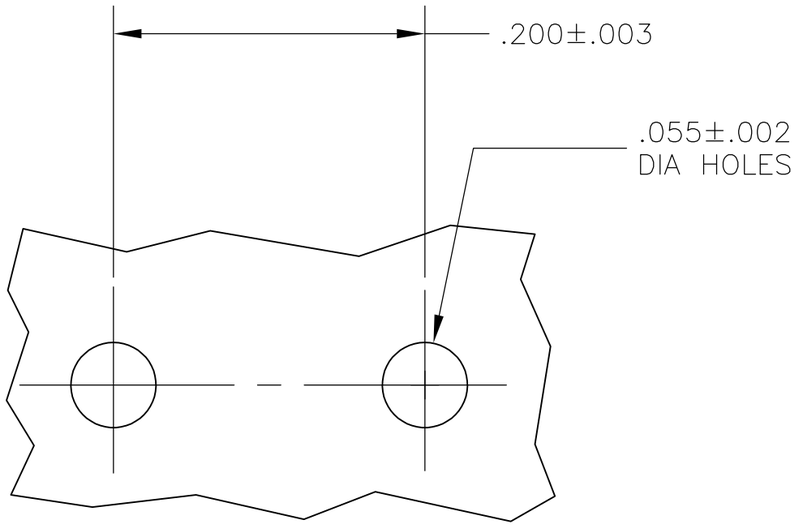

P.C.BOARD HOLES
SCALE 10:1

1217956-1

PART NUMBER

THIS DRAWING IS A CONTROLLED DOCUMENT.

DIMENSIONS: INCHES

TOLERANCES UNLESS OTHERWISE SPECIFIED:

0 PLC	± -
1 PLC	± -
2 PLC	± .010
3 PLC	± -
4 PLC	± -
ANGLES	± -

MATERIAL: BRASS

FINISH: 2 TIN OVER COPPER

DWN	JR RUTH	19MAY03
CHK	P DESANTIS	19MAY03
APVD	P DESANTIS	19MAY03
PRODUCT SPEC	—	
APPLICATION SPEC	—	
WEIGHT	—	

CUSTOMER DRAWING

TE Connectivity

NAME: TAB, FASTON, PC BOARD, .312 SERIES

SIZE	CAGE CODE	DRAWING NO	RESTRICTED TO
A3	00779	C-1217956	—

SCALE	SHEET	REV
8:1	1 OF 1	E