M-13898 | 1

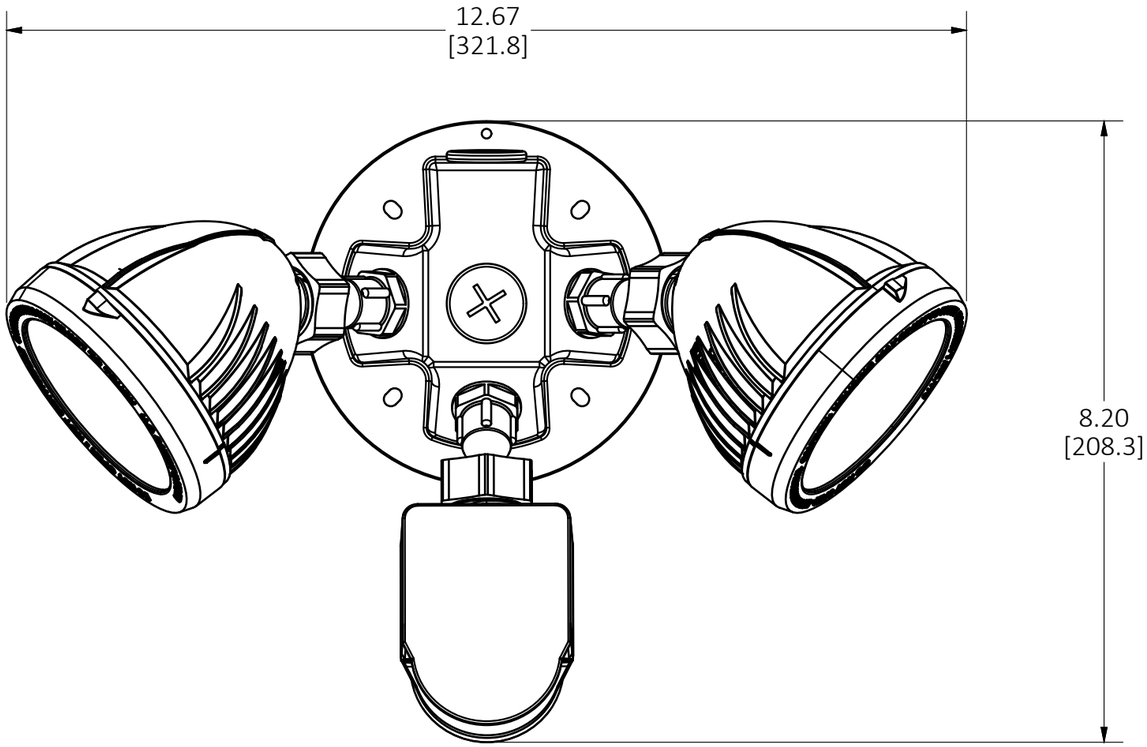

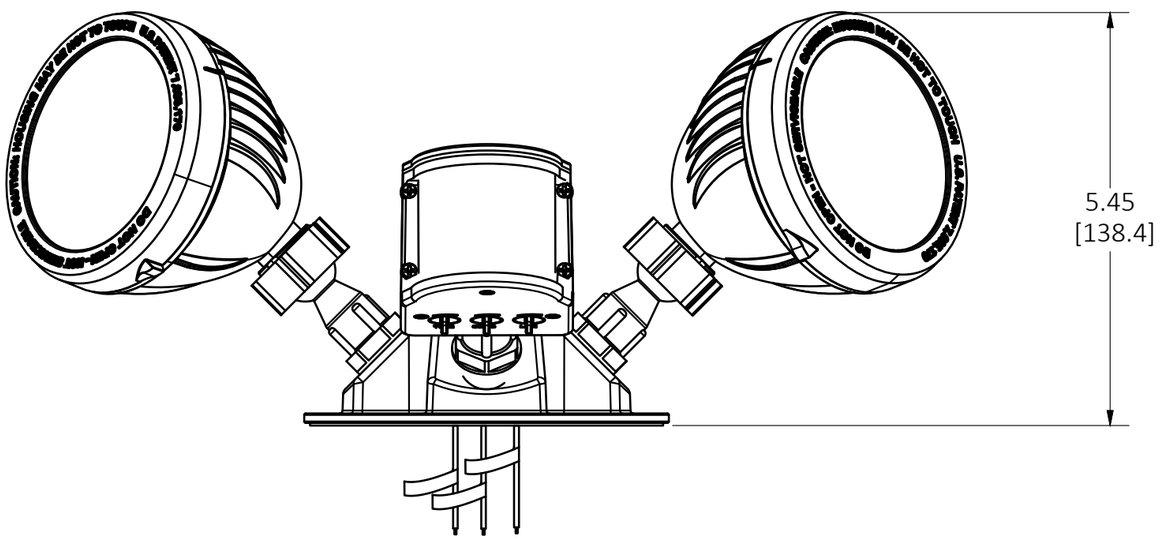

CAT. NO.	FINISH
S2FLSGY	GRAY
S2FLSW	WHITE
S2FLSBZ	BROWN

LIST OF PARTS

DESCRIPTION	MATERIAL	FINISH
LAMP HOUSING	ALUMINUM	SEE TABLE
MOUNTING PLATE	ALUMINUM	SEE TABLE
MOTION SENSOR	————	SEE TABLE
LENS	GLASS	

DIMENSION SHEET FOR CAT. NO.
SEE TABLE

REV	DESCRIPTION	APP	DATE
1	INITIAL RELEASE PER DCN 24000 RM	DJP	4/10/18

THE DESIGN AND DIMENSIONS OF THE PRODUCT SHOWN ON THIS DRAWING ARE SUBJECT TO CHANGE WITHOUT NOTICE. DIMENSIONS ARE IN INCHES [mm].

TITLE
FLOOD LIGHT KIT WITH SENSOR

WIRING DEVICE-KELLEMS
HUBBELL INCORPORATED
SHELTON, CT

TOLERANCES UNLESS OTHERWISE SPECIFIED
.XX = ± .01
.XXX= ± .005
ANGLE TOL. ±2˚

DR. BY	RM	SCALE	1:2
CHK. BY	DJP	DATE	4/10/18

B
M-13898
1

CAGE CODE 74545