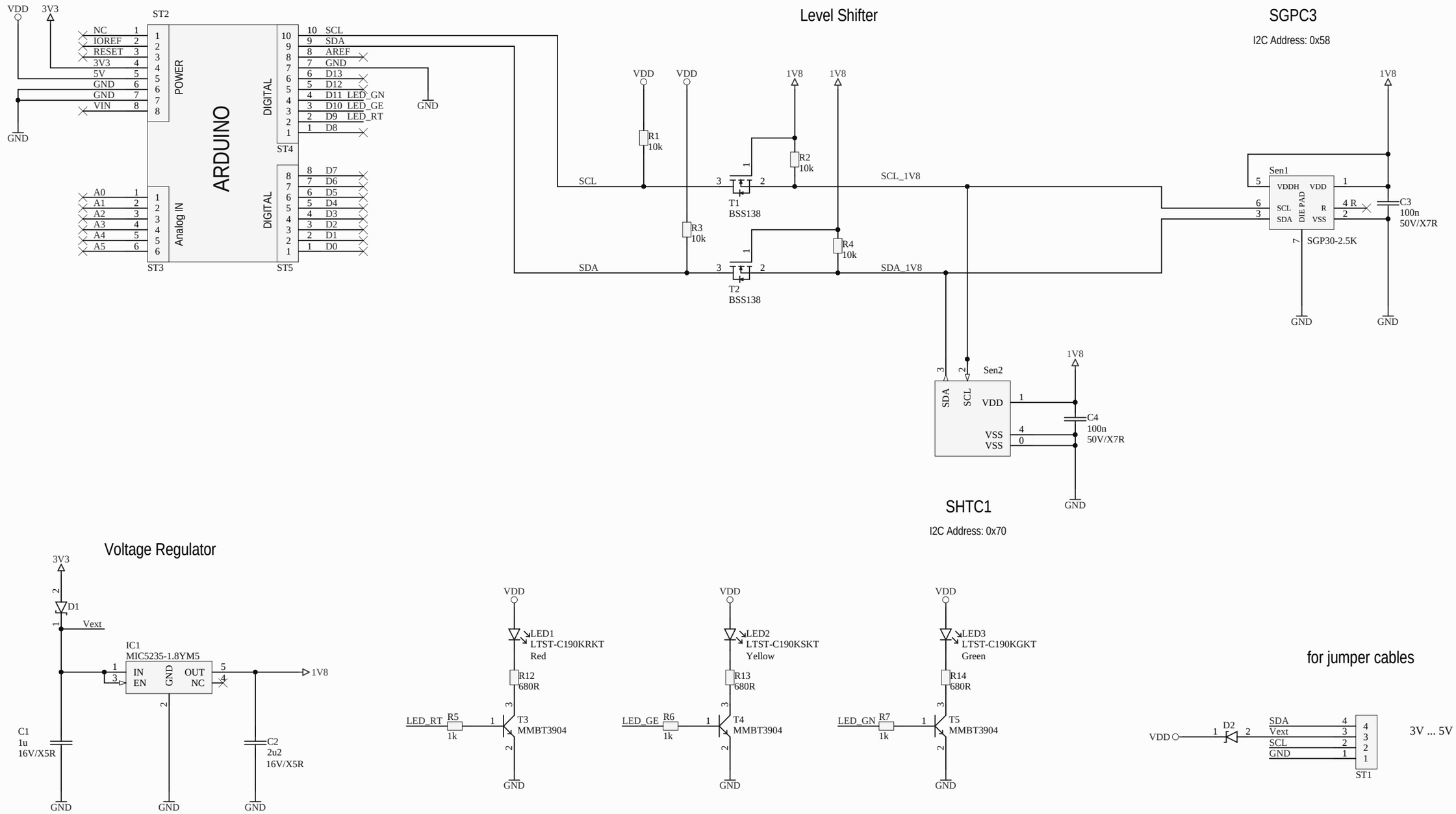

Sensirion
The Sensor Company
Logo1

Bestueckungsmarken

M7 M8 M9

Schrauben

M3 M4 M5 M6

SENSIRION THE SENSOR COMPANY	Date : 06.12.2017	SGP30_SHTC1
	Drawn : MAL	Main
Sensirion AG Laubisrütistr. 50 CH-8712 Stäfa Switzerland	Checked : STT	
	Prj-Nr : 5244920	
	Version : 1	
File : SGP30_SHTC1.SchDoc		