DISTRIBUTION: B-E-G-P-Q-T

DRAWING NUMBER
E-7604-14

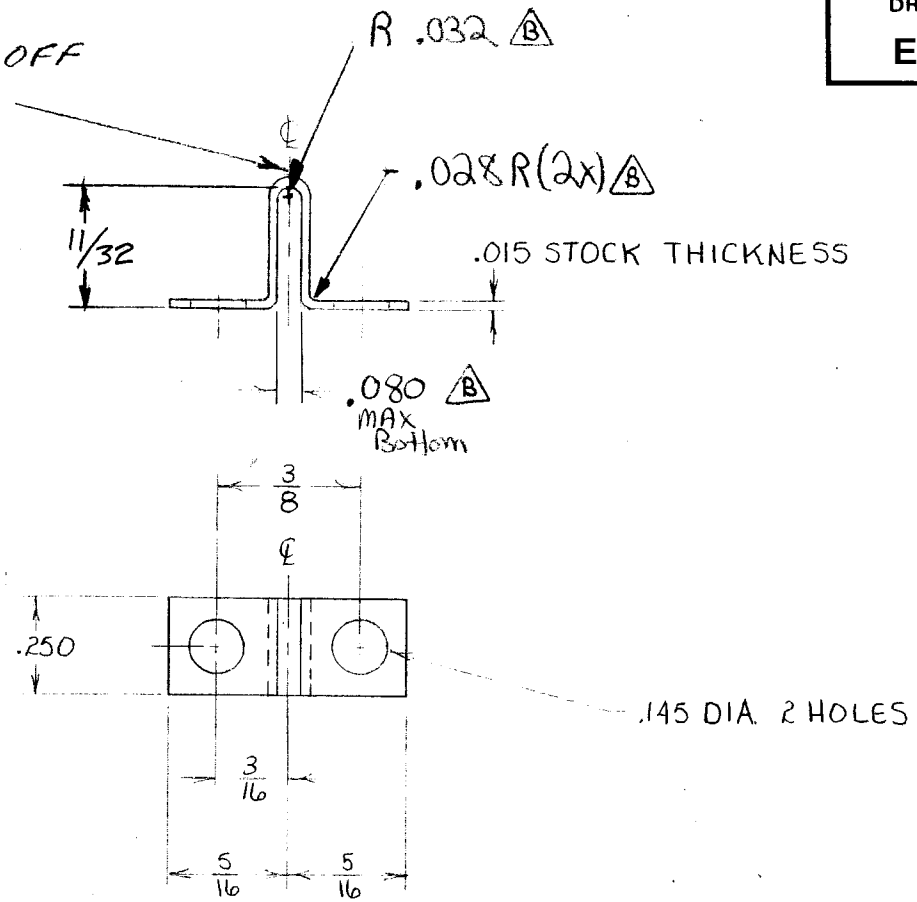

380021459	380021458	NICKEL PLATED
380021458	BRASS 27033001	PLAIN
MATERIAL NO.	MATERIAL	FINISH

Do Not Scale Drawing

Rev. Sym.	Eco. No.	Date
B	10279	9/21/92
A	10199	7/23/87

TOLERANCES, Except as Otherwise Noted

DECIMALS:
.xxx is ± .005
.xx is ± .01

FRACTIONS:
± 1/64

ANGLES:
±

Beau Products
DIVISION OF VERNITRON CORPORATION BOX 10, LACONIA, NEW HAMPSHIRE 03246

SCALE: 2-1	DATE: 5-30-80	Drawn By: DR	Chk. By:	App. By:

TITLE: JUMPER TERMINAL (HOLE TYPE)

USED ON: 7600 SERIES BARRIER TERMINAL STRIPS

DRAWING NUMBER
E-7604-14

3104-2201