THIS DRAWING IS UNPUBLISHED. RELEASED FOR PUBLICATION -,- .
© COPYRIGHT - BY TYCO ELECTRONICS CORPORATION. ALL RIGHTS RESERVED.

LOC	DIST
AD	00

REVISIONS

P	LTR	DESCRIPTION	DATE	DWN	APVD
	H2	ECO-07-003804	11JUL2007	RB	JO
	H3	REVISED PER ECO-09-020932	04SEP09	KK	AEG

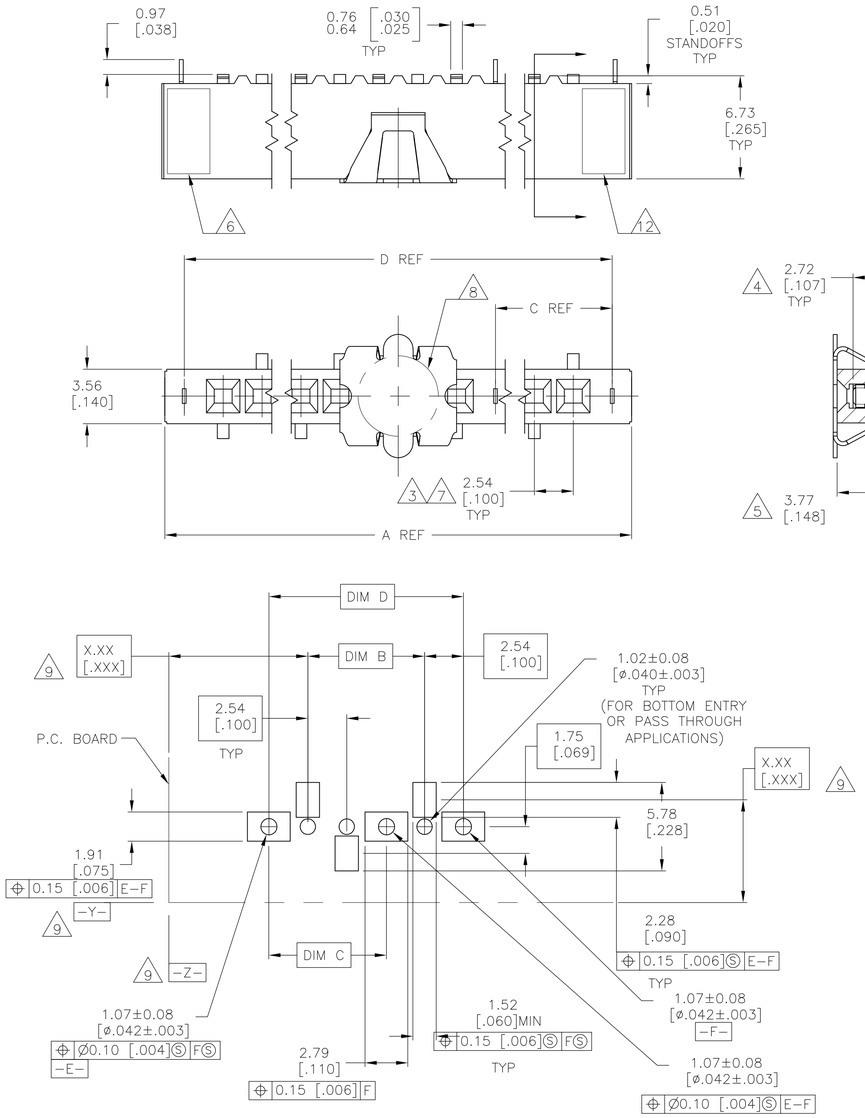

RECOMMENDED PC BOARD PAD PATTERN
0.20[.008] THICK STENCIL

FINISH	EIA TAPE WIDTH	D	C	B	A	NO OF POSN	PART NUMBER
17 11 13 OBSOLETE	24mm	7.62 [.300]	—	2.54[.100]	10.16 [.400]	2	~~8-147730-9~~
SUPERSEDED BY 8-147743-8	N/A	106.68 [4.200]	53.34 [2.100]	104.14[4.100]	109.22 [4.300]	40	~~8-147730-8~~
SUPERSEDED BY 8-147743-7		104.14 [4.100]	50.8 [2.000]	101.6 [4.000]	106.68 [4.200]	39	~~8-147730-7~~
SUPERSEDED BY 8-147743-6		101.6 [4.000]	50.8 [2.000]	99.06 [3.900]	104.14 [4.100]	38	~~8-147730-6~~
17 OBSOLETE		99.06 [3.900]	48.26 [1.900]	96.52 [3.800]	101.6 [4.000]	37	~~8-147730-5~~
		96.52 [3.800]	48.26 [1.900]	93.98 [3.700]	99.06 [3.900]	36	~~8-147730-4~~
		93.98 [3.700]	45.72 [1.800]	91.44 [3.600]	96.52 [3.800]	35	~~8-147730-3~~
	120mm	88.9 [3.500]	10	83.82 [3.300]	91.44 [3.600]	34	~~8-147730-2~~
		86.36 [3.400]	10	81.28 [3.200]	88.9 [3.500]	33	~~8-147730-1~~
		83.82 [3.300]	10	78.74 [3.100]	86.36 [3.400]	32	~~8-147730-0~~
		81.28 [3.200]	10	76.2 [3.000]	83.82 [3.300]	31	~~7-147730-9~~
		78.74 [3.100]	10	73.66 [2.900]	81.28 [3.200]	30	~~7-147730-8~~
		76.2 [3.000]	10	71.12 [2.800]	78.74 [3.100]	29	~~7-147730-7~~
		73.66 [2.900]	10	68.58 [2.700]	76.2 [3.000]	28	~~7-147730-6~~
		71.12 [2.800]	10	66.04 [2.600]	73.66 [2.900]	27	~~7-147730-5~~
		68.58 [2.700]	10	63.5 [2.500]	71.12 [2.800]	26	~~7-147730-4~~
	19 88mm	66.04 [2.600]	10	60.96 [2.400]	68.58 [2.700]	25	~~7-147730-3~~
		63.5 [2.500]	10	58.42 [2.300]	66.04 [2.600]	24	~~7-147730-2~~
		60.96 [2.400]	10	55.88 [2.200]	63.5 [2.500]	23	~~7-147730-1~~
	16	58.42 [2.300]	10	53.34 [2.100]	60.96 [2.400]	22	~~7-147730-0~~
		55.88 [2.200]	10	50.8 [2.000]	58.42 [2.300]	21	~~6-147730-9~~
		53.34 [2.100]	10	48.26 [1.900]	55.88 [2.200]	20	~~6-147730-8~~
		50.8 [2.000]	10	45.72 [1.800]	53.34 [2.100]	19	~~6-147730-7~~
		48.26 [1.900]	10	43.18 [1.700]	50.8 [2.000]	18	~~6-147730-6~~
		45.72 [1.800]	10	40.64 [1.600]	48.26 [1.900]	17	~~6-147730-5~~
	72mm	43.18 [1.700]	10	38.1 [1.500]	45.72 [1.800]	16	~~6-147730-4~~
		40.64 [1.600]	10	35.56 [1.400]	43.18 [1.700]	15	~~6-147730-3~~
		38.1 [1.500]	10	33.02 [1.300]	40.64 [1.600]	14	~~6-147730-2~~
		35.56 [1.400]	10	30.48 [1.200]	38.1 [1.500]	13	~~6-147730-1~~
		33.02 [1.300]	10	27.94 [1.100]	35.56 [1.400]	12	~~6-147730-0~~
		30.48 [1.200]	10	25.4 [1.000]	33.02 [1.300]	11	~~5-147730-9~~
		27.94 [1.100]	10	22.86 [.900]	30.48 [1.200]	10	~~5-147730-8~~
		25.4 [1.000]	10	20.32 [.800]	27.94 [1.100]	9	~~5-147730-7~~
		22.86 [.900]	10	17.78 [.700]	25.4 [1.000]	8	~~5-147730-6~~
	44mm	20.32 [.800]	10	15.24 [.600]	22.86 [.900]	7	~~5-147730-5~~
		17.78 [.700]	10	12.7 [.500]	20.32 [.800]	6	~~5-147730-4~~
	13	15.24 [.600]	10	10.16 [.400]	17.78 [.700]	5	~~5-147730-3~~
	13	12.7 [.500]	10	7.62 [.300]	15.24 [.600]	4	~~5-147730-2~~
	13	10.16 [.400]	10	5.08 [.200]	12.7 [.500]	3	5-147730-1
11 13 OBSOLETE	24mm	7.62 [.300]	—	2.54[.100]	10.16 [.400]	2	3-147730-9
SUPERSEDED BY 3-147743-8	N/A	106.68 [4.200]	53.34 [2.100]	104.14 [4.100]	109.22 [4.300]	40	~~3-147730-8~~
SUPERSEDED BY 3-147743-7		104.14 [4.100]	50.8 [2.000]	101.6 [4.000]	106.68 [4.200]	39	~~3-147730-7~~
SUPERSEDED BY 3-147743-6		101.6 [4.000]	50.8 [2.000]	99.06 [3.900]	104.14 [4.100]	38	~~3-147730-6~~
17 OBSOLETE		99.06 [3.900]	48.26 [1.900]	96.52 [3.800]	101.6 [4.000]	37	~~3-147730-5~~
		96.52 [3.800]	48.26 [1.900]	93.98 [3.700]	99.06 [3.900]	36	~~3-147730-4~~
		93.98 [3.700]	45.72 [1.800]	91.44 [3.600]	96.52 [3.800]	35	~~3-147730-3~~
	120mm	88.9 [3.500]	10	83.82 [3.300]	91.44 [3.600]	34	~~3-147730-2~~
		86.36 [3.400]	10	81.28 [3.200]	88.9 [3.500]	33	~~3-147730-1~~
		83.82 [3.300]	10	78.74 [3.100]	86.36 [3.400]	32	~~3-147730-0~~
		81.28 [3.200]	10	76.2 [3.000]	83.82 [3.300]	31	~~2-147730-9~~
		78.74 [3.100]	10	73.66 [2.900]	81.28 [3.200]	30	~~2-147730-8~~
		76.2 [3.000]	10	71.12 [2.800]	78.74 [3.100]	29	~~2-147730-7~~
		73.66 [2.900]	10	68.58 [2.700]	76.2 [3.000]	28	~~2-147730-6~~
		71.12 [2.800]	10	66.04 [2.600]	73.66 [2.900]	27	~~2-147730-5~~
		68.58 [2.700]	10	63.5 [2.500]	71.12 [2.800]	26	~~2-147730-4~~
	88mm	66.04 [2.600]	10	60.96 [2.400]	68.58 [2.700]	25	~~2-147730-3~~
	2	63.5 [2.500]	10	58.42 [2.300]	66.04 [2.600]	24	~~2-147730-2~~
		60.96 [2.400]	10	55.88 [2.200]	63.5 [2.500]	23	~~2-147730-1~~
		58.42 [2.300]	10	53.34 [2.100]	60.96 [2.400]	22	~~2-147730-0~~
		55.88 [2.200]	10	50.8 [2.000]	58.42 [2.300]	21	~~1-147730-9~~
		53.34 [2.100]	10	48.26 [1.900]	55.88 [2.200]	20	~~1-147730-8~~
		50.8 [2.000]	10	45.72 [1.800]	53.34 [2.100]	19	~~1-147730-7~~
		48.26 [1.900]	10	43.18 [1.700]	50.8 [2.000]	18	~~1-147730-6~~
		45.72 [1.800]	10	40.64 [1.600]	48.26 [1.900]	17	~~1-147730-5~~
	72mm	43.18 [1.700]	10	38.1 [1.500]	45.72 [1.800]	16	~~1-147730-4~~
		40.64 [1.600]	10	35.56 [1.400]	43.18 [1.700]	15	~~1-147730-3~~
		38.1 [1.500]	10	33.02 [1.300]	40.64 [1.600]	14	~~1-147730-2~~
		35.56 [1.400]	10	30.48 [1.200]	38.1 [1.500]	13	~~1-147730-1~~
		33.02 [1.300]	10	27.94 [1.100]	35.56 [1.400]	12	~~1-147730-0~~
		30.48 [1.200]	10	25.4 [1.000]	33.02 [1.300]	11	~~147730-9~~
		27.94 [1.100]	10	22.86 [.900]	30.48 [1.200]	10	~~147730-8~~
		25.4 [1.000]	10	20.32 [.800]	27.94 [1.100]	9	~~147730-7~~
		22.86 [.900]	10	17.78 [.700]	25.4 [1.000]	8	~~147730-6~~
	44mm	20.32 [.800]	10	15.24 [.600]	22.86 [.900]	7	~~147730-5~~
		17.78 [.700]	10	12.7 [.500]	20.32 [.800]	6	~~147730-4~~
	13	15.24 [.600]	10	10.16 [.400]	17.78 [.700]	5	~~147730-3~~
	13	12.7 [.500]	10	7.62 [.300]	15.24 [.600]	4	~~147730-2~~
	13	10.16 [.400]	10	5.08 [.200]	12.7 [.500]	3	147730-1

1. HOUSING: GLASS FILLED, FLAME RETARDANT POLYESTER, BLACK
   CONTACTS: PHOSPHOR BRONZE.
   VACUUM COVER: STAINLESS STEEL
2. CONTACTS: DUPLEX PLATED: 0.25μm[.000010] GOLD IN CONTACT AREA 3.81-7.62μm[.000150-.000300] BRIGHT TIN-LEAD ON LEADS, 1.27μm[.000050] MIN NICKEL UNDERPLATE ALL OVER.
3. DIMENSION APPLIES TO HOUSING CAVITY CENTERLINES ONLY.
4. POINT OF MEASUREMENT FOR PLATING THICKNESS.
5. POINT OF CONTACT DIMENSION.
6. TYCO PART NUMBER AND DATE CODE ARE MARKED IN APPROXIMATE LOCATION SHOWN.
7. TOLERANCE IS NON-CUMULATIVE.
8. 5.2 [.205] MIN TARGET AREA FOR VACUUM PICK-UP COVERS TO BE REMOVED AFTER SOLDERING.
9. DATUMS AND BASIC DIMENSIONS ESTABLISHED BY CUSTOMER.
10. NO CENTER HOLD DOWNS
11. FOR 2 POS, DATE CODE IS STAMPED OPPOSITE SIDE OF TYCO LOGO.
12. TYCO LOGO AND CSA LOGO ARE MOLDED INTO HOUSING.
13. NO PART NUMBER MARKING REQUIRED ON THIS PART.
15. CONTACTS: DUPLEX PLATED: 0.25μm[.000010] GOLD IN CONTACT AREA 3.81-7.62μm[.000150-.000300] MATTE TIN ON LEADS, 1.27μm[.000050] MIN NICKEL UNDERPLATE ALL OVER.
16. ROHS 2002/95/EC COMPLIANT
17. OBSOLETE PARTS: OBSOLETE CIS STREAMLINING PER D.RENAUD/D.SINISI

THIS DRAWING IS A CONTROLLED DOCUMENT.

DIMENSIONS: mm [INCHES]

TOLERANCES UNLESS OTHERWISE SPECIFIED:
0 PLC ± -
1 PLC ± -
2 PLC ± -
3 PLC ± .005
4 PLC ± -
ANGLES ± -

MATERIAL 1

FINISH SEE TABLE

DWN	R BROWN	19JAN01
CHK	J OLSON	19JAN01
APVD	J OLSON	19JAN01
PRODUCT SPEC	108-25026	
APPLICATION SPEC	114-25018	
WEIGHT	-	

Tyco Electronics — Tyco Electronics Corporation, Harrisburg, Pa 17105-3608

NAME: RECPT. ASSY., MOD IV, SINGLE ROW, .100 CL, SURFACE MOUNT, VERTICAL, DUAL ENTRY CLOSED ENTRY

SIZE	CAGE CODE	DRAWING NO	RESTRICTED TO
A1	00779	C-147730	-

CUSTOMER DRAWING | SCALE 5:1 | SHEET 1 OF 1 | REV H3