connector layout

(1:1)

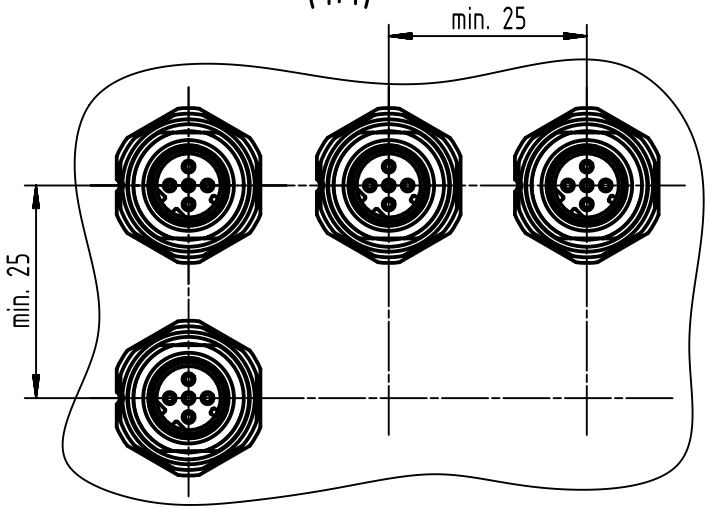

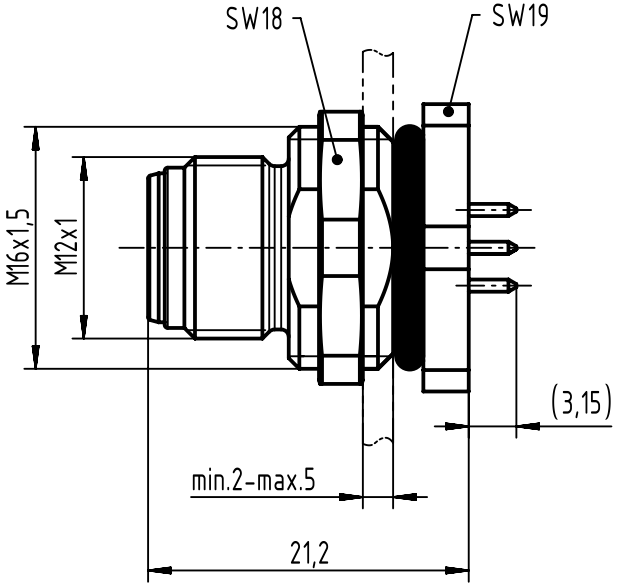

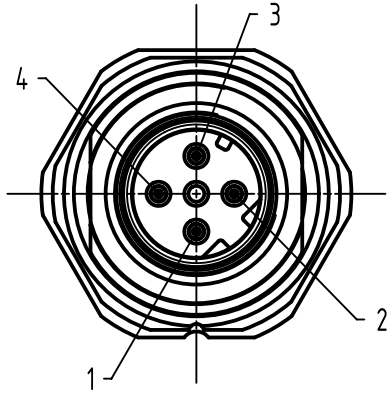

panel cut out

(1:1)

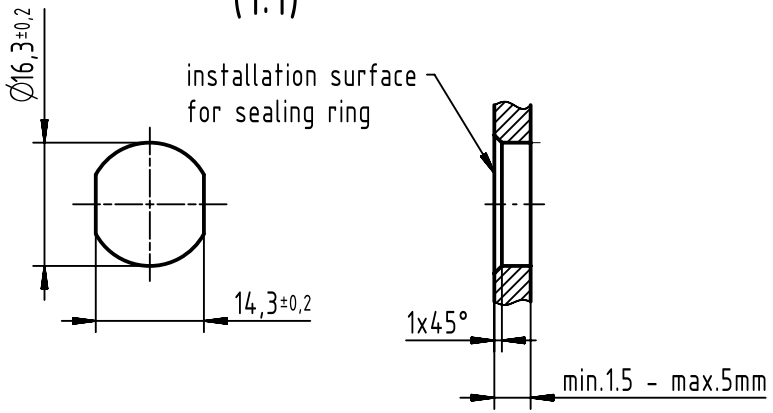

PCB layout

(5:1)

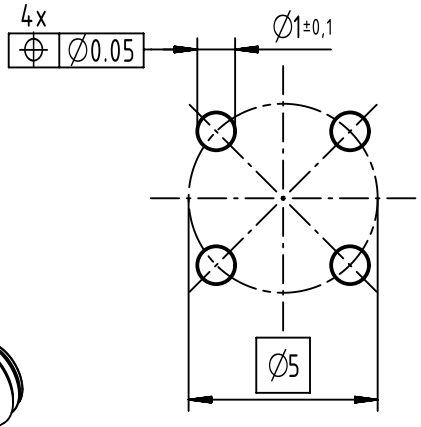

recommended PCB thickness 1,6mm

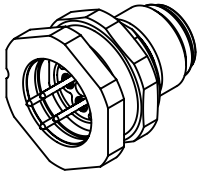

All Dimensions in mm Original Size DIN A4	Scale 2:1	Free size tol.		Ref. Sub.	
All rights reserved Department EL PD	Created by DYCKC	Inspected by HARLASS	Standardisation KOHLER	Date 2018-12-18	State Final Release
HARTING Electronics GmbH D-32339 Espelkamp	Title HARTING M12 PFT D-coded 4-pole male				Doc-Key / ECM-Nr. 100216520/UGD/003/D 500000140678
	Type TB	Number 21033711400		Rev. D	Page 1/1

A4