DN00012000006FN_CUST

RELEVANT SPEC.
MIL-DTL-83513 INTERFACE
PROJE MODEL FILE
DN00012000006FN

SHT 1 OF 1
EX No.
NA

IF IN DOUBT - ASK

ALL DIMENSIONS ARE IN mm

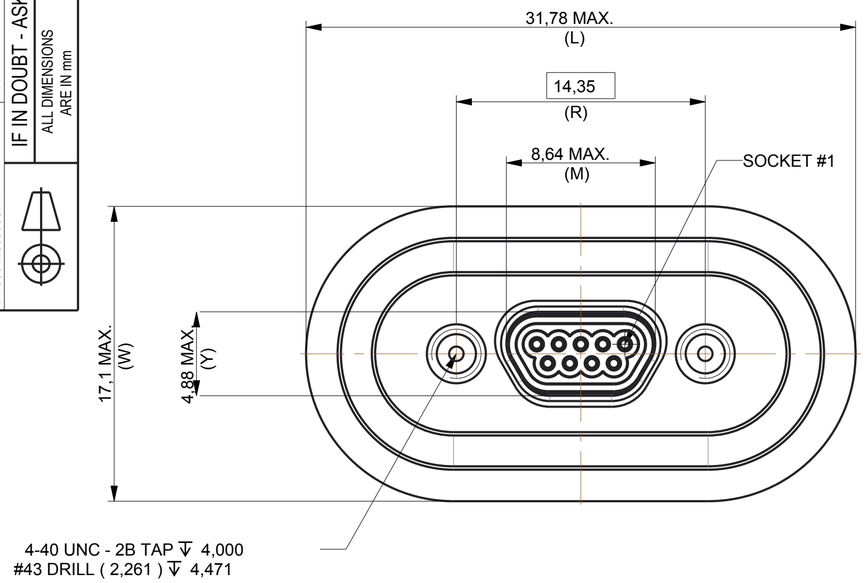

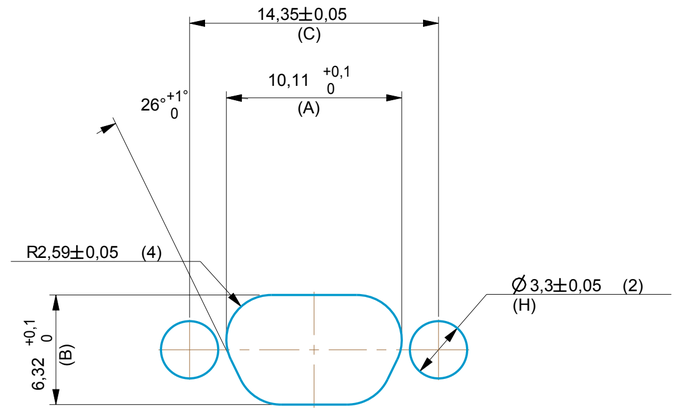

PANEL CUT-OUT DETAIL
SCALE 4:1

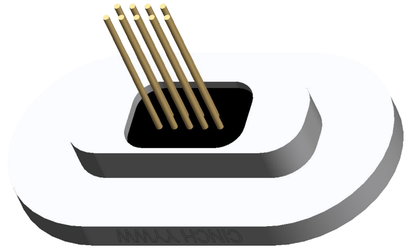

SCALE 3:1

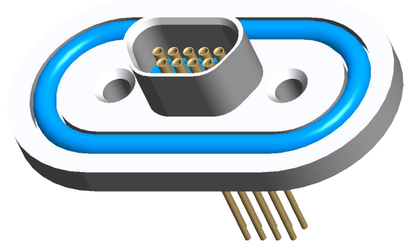

SCALE 3:1

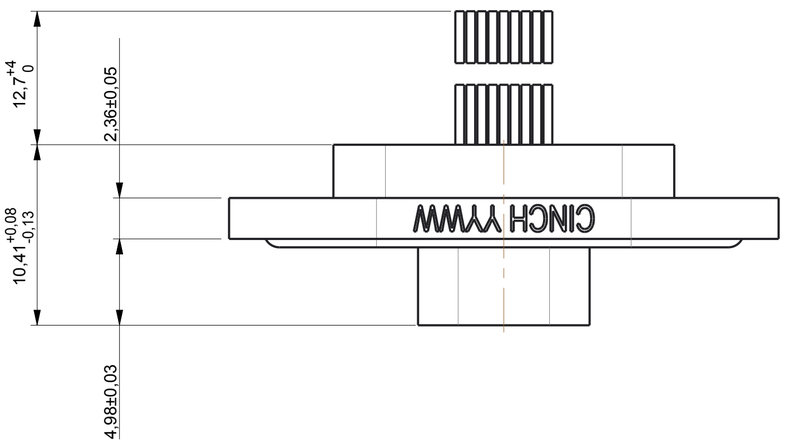

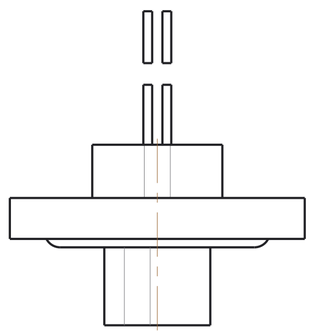

ISSUE GROUPS
A

PART NUMBER	A	B	C	H	DESCRIPTION2
DN0000809	10,11	6,32	14,35	3,30	9W REVERSE MOUNT PANEL
DN0000815	13,92	6,32	18,16	3,30	15W REVERSE MOUNT PANEL
DN0000821	17,73	6,32	21,97	3,30	21W REVERSE MOUNT PANEL
DN0000825	20,27	6,32	24,51	3,30	25W REVERSE MOUNT PANEL
DN0000831	24,08	6,32	28,34	3,30	31W REVERSE MOUNT PANEL
DN0000837	27,89	6,32	32,13	3,30	37W REVERSE MOUNT PANEL
DN0000851	26,62	7,42	30,86	3,30	51W REVERSE MOUNT PANEL
DN0000810	39,00	8,52	45,72	4,10	100W REVERSE MOUNT PANEL

PART NUMBER	SALES_CODE	L_MAX	M_MAX	R_BASIC	W_MAX	Y_MAX	DESCRIPTION2
DN00012000096FN	DCDH-9S4C40.5BN	31,78	8,64	14,35	17,10	4,88	9W PCB SOCKET ASSEMBLY
DN00012000156FN	DCDH-15S4C40.5BN	34,26	12,45	18,16	17,10	4,88	15W PCB SOCKET ASSEMBLY
DN00012000216FN	DCDH-21S4C40.5BN	39,25	16,26	21,97	17,10	4,88	21W PCB SOCKET ASSEMBLY
DN00012000256FN	DCDH-25S4C40.5BN	41,76	18,80	24,51	17,10	4,88	25W PCB SOCKET ASSEMBLY
DN00012000316FN	DCDH-31S4C40.5BN	44,23	22,61	28,32	17,10	4,88	31W PCB SOCKET ASSEMBLY
DN00012000376FN	DCDH-37S4C40.5BN	49,22	26,42	32,13	17,10	4,88	37W PCB SOCKET ASSEMBLY
DN00012000516FN	DCDH-51S4C40.5BN	48,60	25,15	30,86	18,20	5,99	51W PCB SOCKET ASSEMBLY

NOTES:

1. DIMENSIONS ARE FOR REFERENCE ONLY.
2. CUSTOMER DRAWING ONLY. NOT USED FOR CINCH MANUFACTURE.
3. PART MARK CONNECTORS WITH CINCH AND DATE-CODE.
4. CONNECTOR TO BE HERMETICALLY TESTED TO 1 x 10^{-8} cc/sec @ 1 ATMOSPHERE HELIUM.

MATERIAL SPECIFICATIONS:

5. CONNECTOR SHELL: >ASTM ALLOY< SAE-AMS-QQ-A-250. ELECTROLESS Ni PER SAE-AMS-C-26074.
6. CONTACT (FEMALE SOCKET): >Cu ALLOY<. Au PER MIL-DTL-45204, TYPE 1.
7. INSULATOR: >PBT< PER MIL-M-24519.
8. INTERFACIAL GASKET: >FVMQ< PER MIL-R-25988 OR >PMQ< PER ZZ-R-765.
9. HARDWARE: >303SS< PASSIVATE DIP PER SAE-AMS-QQ-P-35.
   HARDWARE TO BE PURCHASED SEPERATELY TO SUIT PANEL THICKNESS.
10. DUSTCAP: >LDPE< OR ANTI-STATIC >HDPE<.
11. WIRE (24AWG): >Cu ALLOY< PER ASTM-B1-56. Au PER MIL-DTL-45204, TYPE 2.
    WIRES WILL NOT BE STRAIGHT AS SHOWN IN DRAWING VIEWS

GENERAL SPECIFICATIONS:

11. ALL OTHER DETAILS AND DIMENSIONS TO BE AS PER MIL-DTL-83513 OR CINCH HERMETIC DURA-CON CATALOGUE.

CODE	DESCRIPTION	ITEM	FINISH/MATL	QTY
	HYSOL RESIN (BLACK)	10		
	HYSOL HARDENER	9		
	HERMETIC COMPOUND	8		
	24AWG SOLID WIRE	7		
	O-RING SEAL (9W)	6		
	9-51W SEALING GASKET	5		
	9-51W SKT INSULATOR	4		
	9-51W SKT DUSTCAP	3		
	SKT CONTACT CRIMP 24 GAUGE	2		
	9-51W OUTER SKT SHELL PLTD	1		

ISSUE	DATE	NP/NR ECN
A	02-Feb-17	PRELIM.

APPD

THIS DRAWING IS COPYRIGHT AND IS ISSUED ON CONDITION IT IS NOT COPIED, REPRODUCED OR DISCLOSED TO A THIRD PARTY WITHOUT THE CONSENT IN WRITING OF Cinch CONNECTIVITY SOLUTIONS LTD. ATTENTION IS DRAWN TO THE FACT THE ARTICLE DISCLOSED MAY BE COVERED BY BRITISH OR FOREIGN PATENTS, GRANTED OR PENDING OR REGISTERED DESIGN.

TITLE
HERMEYIC MICROMINIATURE
9-51W SOCKET ASSEMBLY
PCB TAILS

DRN M.BARRACLOUGH | DATE 02-Feb-17 | SCALE 4:1 | CHD NOT
MATERIAL SPECIFICATION | APPD NOT
RAW MAT'L
FINISHED HARDNESS | FINISH TREATMENT | COLOUR

GEN. TOLERANCES

2 DEC. PL.	±0.1
1 DEC. PL.	±0.2
0 DEC. PL.	±0.5
ANGULAR	±1
TOOL R MAX.	0.18

Cinch CONNECTIVITY SOLUTIONS Ltd. Worksop, England.

cinch CONNECTIVITY SOLUTIONS a bel group