THIS COPY IS PROVIDED ON A RESTRICTED BASIS AND IS NOT TO BE USED IN ANY WAY DETRIMENTAL TO THE INTERESTS OF PANDUIT CORP.

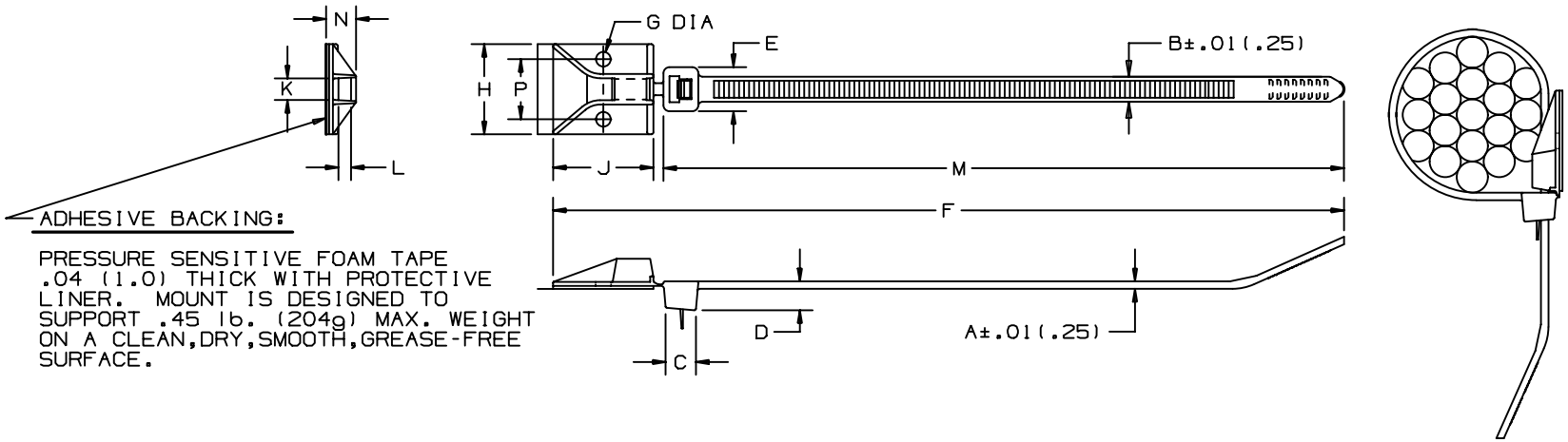


ADHESIVE BACKING:

PRESSURE SENSITIVE FOAM TAPE .04 (1.0) THICK WITH PROTECTIVE LINER. MOUNT IS DESIGNED TO SUPPORT .45 lb. (204g) MAX. WEIGHT ON A CLEAN,DRY,SMOOTH,GREASE-FREE SURFACE.

| PANDUIT* PART NO. | BUNDLE DIA. MIN. in (mm) | BUNDLE DIA. MAX. in (mm) | A in (mm) | B in (mm) | C in (mm) (REF) | D in (mm) | E in (mm) (REF) | F in (mm) (REF) | G in (mm) (REF) | H in (mm) | J in (mm) | K in (mm) (REF) | L in (mm) (REF) | M in (mm) (REF) | N in (mm) | P in (mm) (REF) | MIN. LOOP TENSILE lbs. (N) | CROSS SECTION | WEIGHT lbs. (g) /100 pcs. |
|---|---|---|---|---|---|---|---|---|---|---|---|---|---|---|---|---|---|---|---|
| PRA2S-A | .25 (6.4) | 1.85 (47.0) | .052 (1.3) | .190 (4.8) | .258 (6.6) | .220 (5.6) | .316 (8.0) | 8.5 (216) | .148 (3.8) | .90 (22.9) | 1.00 (25.4) | .200 (5.1) | .134 (3.4) | 7.3 (185) | .300 (7.6) | .600 (15.2) | 50 (222) | STANDARD | .53 (242) |

NOTES:
1. SEE CURRENT PRICE SHEET FOR PART NUMBER SUFFIX DESIGNATIONS FOR PACKAGE SIZE.

TO APPLY MOUNTS:

1) REMOVE PROTECTIVE LINER FROM MOUNT.
2) PLACE IN DESIRED LOCATION.
3) APPLY PRESSURE TO TOP SURFACE OF MOUNT.

NO WARRANTY, EXPRESSED OR IMPLIED, IS MADE BY PANDUIT WITH RESPECT TO ADHESIVE BOND PERFORMANCE. AMONG OTHER THINGS, THE CONDITIONS UNDER WHICH THESE MOUNTS MAY BE APPLIED AND/OR THE SURFACE TO WHICH THEY MAY BE APPLIED ARE BEYOND PANDUIT'S CONTROL.

DIMENSIONS IN BRACKETS ARE METRIC [mm]

CAD FILENAME/LAYERS: G00239EV_PB_PRA2S_01

PANDUIT CORP. TINLEY PARK, ILLINOIS

COMBINATION ADHESIVE MOUNT/TIE
PRA SERIES

UNLESS OTHERWISE SPECIFIED, DIMENSIONAL TOLERANCES ARE:
(.X) ±0.05 [1.3] (.XXX) ±0.010 [0.25]
(.XX) ±0.02 [0.5] ANGLES ± 5°

UNLESS OTHERWISE SPECIFIED, ALL DIMENSIONS ARE GIVEN IN INCHES, THIRD ANGLE PROJECTION.

DRAWN BY: CGSM
MAT'L: NYLON 6/6
SCALE: NONE
DATE: 1/22/97
CHK'D:
DRAWING NO.: GB0239EV
DWG SIZE: A

| REV | DATE | BY | CHK | DESCRIPTION | ECN | - R | CUST | SUP | |
|---|---|---|---|---|---|---|---|---|---|
| 1 | 4/28/04 | JAD | | UPDATE DRAWING, ADD REF TO SEVERAL DIMENSIONS | GB0239EV | 1 | | | |