This document is the property of Amphenol Corporation and is delivered on the express condition that it is not to be disclosed, reproduced or used, in whole or in part, for manufacture or sale by anyone other than Amphenol Corporation without its prior concent, & that no right is granted to disclose or to use any information in this document.

REVISIONS				
SYM	ECN	DESCRIPTION	DATE	APPROVED
1			02/22/08	

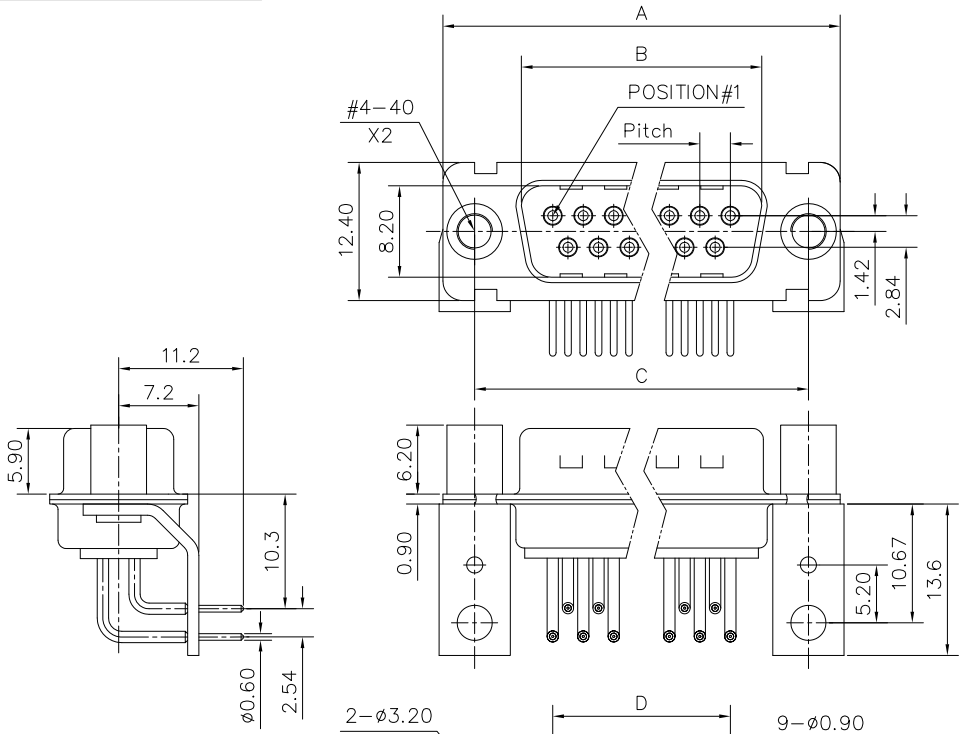

RECOMMENDED P.C.B LAYOUT

(TOLERANCE +/-0.03)

Customer drawing

DIM.S / SHELL	A	B	C	D	Pitch
9	30.70	16.80	25.00	10.96	2.74
15	39.00	25.10	33.30	19.18	2.74
25	52.90	38.80	47.00	33.12	2.77
37	69.20	55.30	63.50	49.68	2.77

D-SUB TECHNICAL DATA

SHELL : Steel 2.5um(100u") min tin over 1.25um(50u") min nickel

BODY : Glass filled thermoplastic.
Flame retardant to UL94 V-0 Color Black

CONTACTS : Brass
0.4um(15u") min gold over 1.25um(50u") min nickel

BRACKET : Steel.100u" min tin over 50u" nickel

ELECTRICAL : Voltage rating :300 V RMS at 50 Hz
Current rating 7.5A.
Insulation resistance >5000 M Ohms
Contact resistance 20 mOhms max.

CLIMATIC : Temperature range -55 °C up to 125°C

MARKING : Amphenol-...(Series No.)
Commercial reference
Manufacturing date

PRODUCT CODE

L 717DF X XX P 1ATN

- L: RoHS Compliance
- 717DF: tinned shell + dimples for plug
- Shell Size :E,A,B,C
- Configuration: 09,15,25,37
- Termination: Right angle connector metal bracket: 1ATN=X=2.54mm
- Contact type: P=Pin

UNLESS OTHERWISE SPECIFIED TOLERANCES	U.S.	METRIC
.X +/-		0.50
.XX +/-		0.30
.XXX +/-		0.20
FRACTIONS +/-		
ANGLES +/-		5°

FOR MATERIALS AND FINISHES SEE NOTES

REMOVE SHARP EDGES

DIMENSIONS: U.S. INCHES / METRIC MM

APPROVAL		DATE
DRAWN	Christina.cui	02/22/08
CHECKED	lik.wang	02/22/08
CHECKED		

DRAWING FILE :

ANGLE OF PROJECTION

Amphenol

TITLE: Machined contacts connector, DF series

SIZE	DRAWING NO.	REV.
A4	C L717DFXXXP1ATN	1

SCALE NONE SHEET 1 OF 1