sales@trfastenings.com
www.trfastenings.com

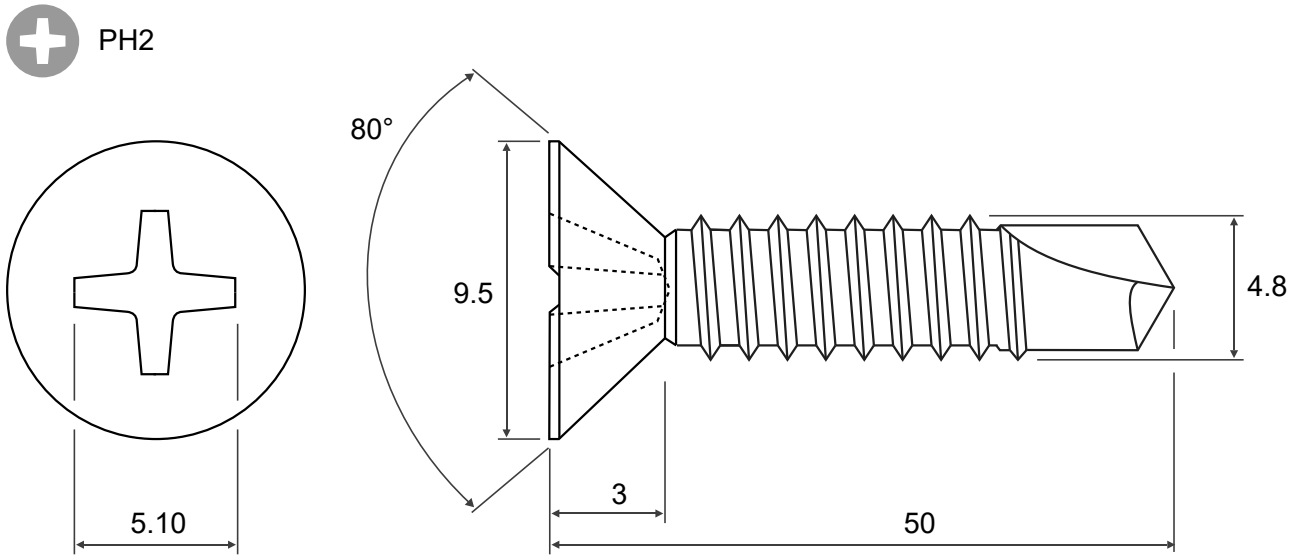

4.8mm x 50mm Countersunk Head Cross Recess H Drive Self Drilling Screw	Material	A2 Stainless Steel	Customer Part No.	4.8 X 50 KPA2DX S50 DIN7504
DIN 7504P ~ISO 15482	Finish	Self Colour	Web Ref No	TR00011901-000

© TR FASTENINGS LTD. 2020 THIS DRAWING IS THE PROPERTY OF TR FASTENINGS AND IS SUPPLIED IN CONFIDENCE, AND MAY NOT WHOLLY OR PARTIALLY BE COPIED, WITHOUT THE EXPRESSED AUTHORISATION OF TR FASTENINGS LTD.

UNCONTROLLED COPY

UNLESS OTHERWISE SPECIFIED : DIMENSIONS ARE IN MILLIMETERS